BRIDGEVIEW MFG. INC.

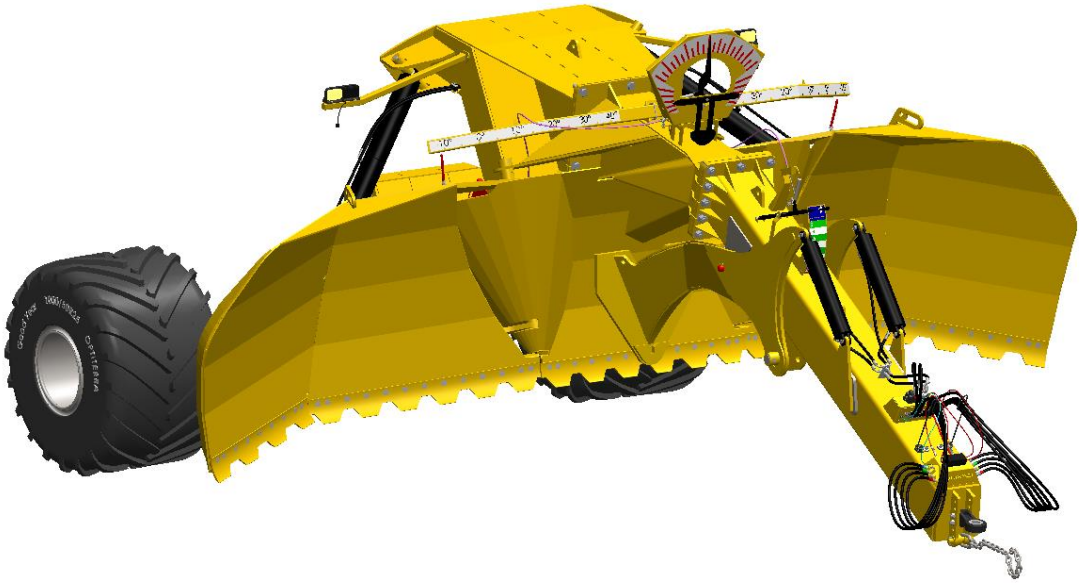

PULLDOZER TRANSFORMER

2470 2470XL

Operator, Assembly & Parts Manual

Last Updated: October 31, 2019

Bridgeview Manufacturing Inc.
P.O. Box 4
Gerald, Saskatchewan, Canada
S0A 1B0
Phone: 1-306-745-2711
Fax: 1-306-745-3364
Email: bmi@sasktel.net
www.bridgeviewmanufacturing.com

Your Authorized Dealer
Your Serial Number

The serial number is located on the front of the middle blade on the left side of the machine.

TABLE OF CONTENTS

1 INTRODUCTION 4
1.1 Safety Precautions 5
1.2 Power Requirements: 6
1.3 Transportation 7
1.4 Field to Transport Position 8
1.5 Storage 10
1.6 Lights and Marking 11
2 FEATURES AND OPERATION 12
2.1 Hydraulic Systems 13
2.2 Hitch Options 15
2.3 Tires 16
2.4 Lubrication 17
2.5 Blade Options 18
2.6 Trencher Option 19
2.7 GPS Option 21
3 ASSEMBLY & PARTS MANUAL 22
3.1 Component Information 22
3.2. Body Assembly 30
3.3 Hydraulics Assembly 43
3.4. Electrical Assembly 58
3.4.1 Serial Number PD1315 & Down 58
3.4.2 Serial Number PD1316 & Up 61
3.5. Parts Assembly 65
3.5.1 Scraper Blades 65
3.5.2 Operator Manual & Serial Number 66
3.5.3 Angle Indicator 66
3.5.4 Height Indicator 70
3.5.5 Grease Tube 72
3.6. Trencher Option 73
3.7. Decals 77
4 Bolt Torque Values 83
NOTES 85

1 INTRODUCTION

Thank you for purchasing a Pulldozer Transformer from Bridgeview Manufacturing. With the proper operation and service as outlined in this manual, the Pulldozer Transformer will provide you with years of trouble free operation.

This is a complete safety, operation, and parts manual for the Pulldozer Transformer. The manual covers in detail how to use your new machine safely and effectively. The procedures outlined in this manual should be followed to ensure safe operation and longevity of your machine. The parts and assembly manual covers all parts you may need to order in case of accident or breakdown and how to install them. Please read completely through this manual before beginning operation of your new machine.

Left and right as used in the parts book is as viewed from the rear of the Pulldozer Transformer looking in the direction of travel.

1.1 Safety Precautions

The following safety precautions MUST be followed to ensure the safe operation of the Pulldozer Transformer.

- **Tow at speeds not exceeding 31 miles/hour** (50 km/h) **when unloaded**. Slow down for hills, curves, rough area, and in advance of braking to prevent loss of control and possible injury or death.
- Read and follow the **Highway Transport** section before towing on public roads.
- **Always** turn off tractor, ensure parking brake is applied before leaving the operating platform, and remove key when working on machine
- **Always** leave cutting edge on the ground when not operating.
- **Always** leave hydraulic cylinders, when not operating, in the de-stroked position.
- **Stand clear** of the Pulldozer Transformer while in operation.
- **Beware** of pinch points at all articulating joints.
- **Support Raised Equipment** when working on machine
- **Do Not** over load Pulldozer Transformer and tractor design limits

1.2 Power Requirements:

The Pulldozer Transformer is designed to utilize the pulling power of a large four-wheel-drive tractor. The following table shows the recommended drawbar horsepower required to pull a Pulldozer Transformer. Pulling with too large a tractor risks damaging the machine, while too small a tractor risks overloading and damaging the tractor.

	Horsepower
24 Foot	400 - 600 HP

Call Before You Dig:

Every time you dig in the ground, wherever it may be, **THERE IS DANGER BELOW!** You run the risk of loss of life or damage to property if you hit any of the many buried cables, conduits, gas or oil pipelines and/or other underground facilities that serve our cities, towns, and rural areas.

Contact the nearest **ONECALL** (**Call Before You Dig)** services for optimal diligence towards preventing damage to underground infrastructure.

Canada		
Province	**Number**	**Website**
British Columbia	1.800.474.6886	http://www.bconecall.bc.ca/
Alberta	1.800.242.3447	http://www.alberta1call.com/
Saskatchewan	1.866.828.4888	http://www.sask1stcall.com/
Manitoba	1.800.827.5094	www.callb4udig.mb.ca/
Ontario	1.800.400.2255	http://www.on1call.com/
Quebec	1.800.663.9228	http://www.info-ex.com/
United States		
All states	811	http://www.call811.com/
TransCanada Pipelines		
Canada	1.888.982.7222	
United States	1.800.447.8066	

1.3 Transportation

Check with local authorities regarding transport on public roads. Follow all applicable laws and regulations.

Note the transportation dimensions shown below:

	2470	2470XL
Total Weight	31,000 lb.	34,000 lb.
Hitch Weight	10,000 lb.	12,000 lb.
Axle Weight	21,000 lb.	22,000 lb.
Transport Height	12'-1"	
Transport Blade Clearance	33"	
Transport Width (Blade)	13'-7"	
Transport Width (Tires)	13'-10"	
Transport Length	28'-5"	

When transporting the Pulldozer Transformer on public roads, the following precautions should be taken:

- Avoid transporting at night whenever possible
- ALWAYS ensure that the flashers and tail lights are clean and operational
- ALWAYS ensure that the Slow-Moving Vehicle (SMV) sign is visible
- NEVER exceed speeds of 25 mph (40 km/h)
- ALWAYS ensure that the safety chain is properly installed
- DO NOT tow with a vehicle that cannot handle the massive weight of the Pulldozer Transformer
- Check for the oversize or overload permit with the authorities for transportation on public highways.
- Ensure that blade is fully lifted, level, and not in contact with the road (maintain a safe level from the ground).
- Ensure that the trencher attachment (if installed) is fully retracted.
- Ensure that all safety locks are in place
- Ensure that the hydraulic hoses are properly secured (not dragging on the ground)

1.4 Field to Transport Position

1. Position machine on level ground. Stop tractor, and engage parking brake. Make sure wings are in the flat position, zero degrees on indicator decal.

2. Engage lift cylinder remote and lower machine onto ground. Ensure the lift cylinders are fully retracted, telescopic tubes are free to retract, and tires are off the ground.

3. Retract tires to transport position

4. Raise the machine extending lifting cylinders

5. Operate the wing lift hydraulics to raise the wings fully into transport position.

Use transport safety chain to lock the wings in transport position. Apply transportation locks (figure 1.1).

Transportation Locks:

Ensure that all the safety locks and pins are ON in the right position while transporting. This will prevent the blade from accidentally falling during transport.

1. Blade lift lock (both sides) - swing over cylinder shaft
2. Trencher lock - insert pin through hole

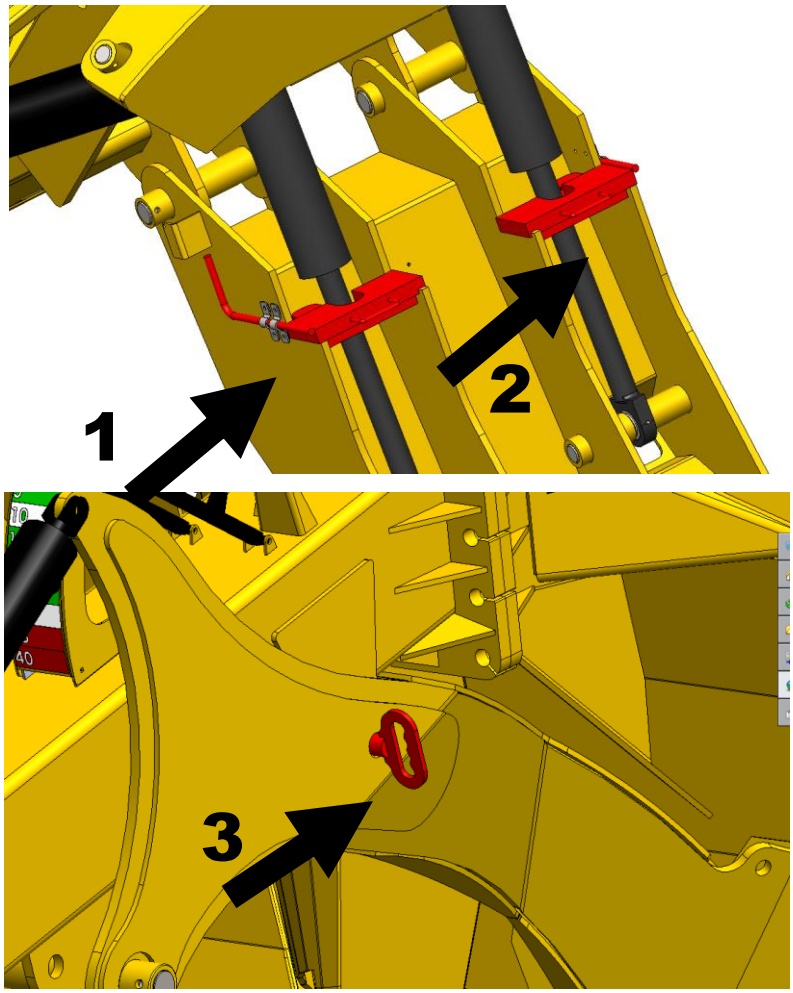

Figure 1.1 – Shows the safety locks marked by arrows

1.5 Storage

When storing the 2470 Pulldozer Transformer make sure and apply the lift cylinder safety locks, (1 & 2) in figure 1, and trencher safety lock (if equipped), (3) in figure 1. Put wood blocks underneath the blades so it doesn't sit in the ground. Apply grease to all exposed hydraulic cylinder shafts.

1.6 Lights and Marking

The Pulldozer Transformer comes standard with a light kit for better visibility. The lights can be plugged into the standard 7-pin round trailer plug on a tractor. The lights function as flashing amber lights, with solid red tail lights. Ensure that they are functioning properly before towing.

Ensure that the SMV (Slow Moving Vehicle) sign is in place and visible.

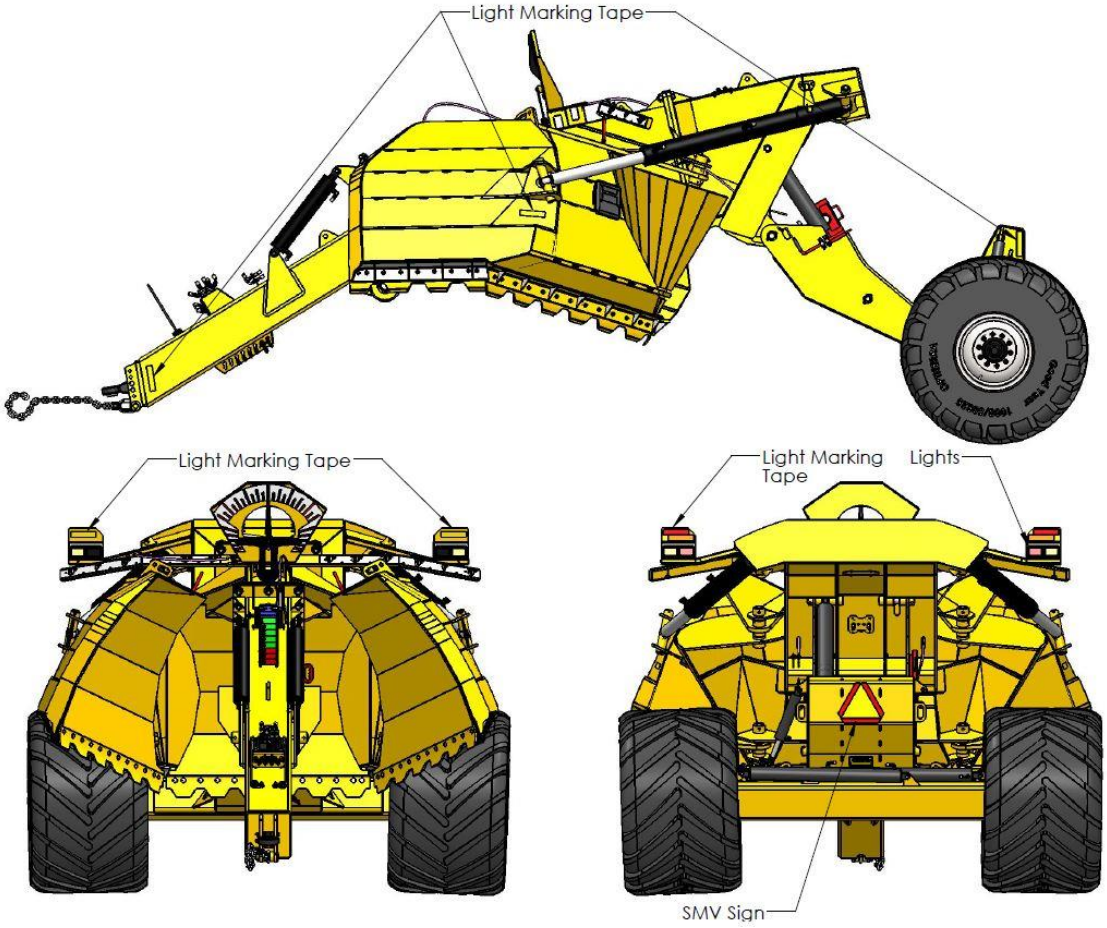

Figure 1.2 – Light marking locations

2 FEATURES AND OPERATION

The Pulldozer Transformer land shaper operates as a dozer, scraper, grader, and V-ditcher (XL series) all in one complete, efficient, and virtually indestructible package.

The Pulldozer Transformer is capable of reclaiming unproductive land to allow for more seeded acreage. It can also drag dirt to elevate sloughs and potholes, level land, back-slope, clean and contour existing ditches and drains to improve draining, and allow for sooner access by seeding equipment.

When mated with a GPS leveling system, the Pulldozer Transformer is excellent at making perfectly contoured fields for maximum drainage, or water retention.

Operators have reported 1 acre per hour of land reclamation, leaving it seed bed ready.

The Pulldozer Transformer allows for up to 25 cubic yards of dirt movement over short distances for the 24-foot unit.

The retractable trencher allows for trenches up to 36" wide by 24" deep, while leaving no windrow ridges to interfere with draining. This allows most farm equipment to easily drive right over the trench on an angle.

Enjoy operating your new Pulldozer Transformer.

2.1 Hydraulic Systems

Hydraulic systems store considerable energy. They are used to:

- lift and change the position of attachments
- operate hydraulic motors
- assist in steering and braking

Leaks from hydraulic systems are a serious hazard because of the high pressure and temperature of the fluid contained in the system. Even fine jets of hydraulic fluid can burn or pierce skin and tissue. Workers should:

- Never inspect hydraulic hoses with bare hands;
- Wear long sleeves, heavy gloves and safety glasses when checking for leaks;
- Follow the instructions (blade to be on the ground and no pressure in hydraulic lines during maintenance) because the specific procedures for servicing these systems are very important for one's safety.

Where appropriate, a properly qualified and certified mechanic should perform repairs and maintenance.

Work should not be performed under raised hydraulic equipment.

There are five sets (2470) and six sets (2470XL) of hydraulic hoses to connect to the tractor. Each hose has a colored marker to identify its function. They should be connected at best convenience for the tractor's controls.

An optional diverter kit **(28642)** is available to allow the Pulldozer Transformer 2470 to run using only four sets of hoses. The function is then determined by a control box, mounted in the cab of the tractor.

An optional diverter kit **(28643)** is available to allow the Pulldozer Transformer 2470XL to run using only four sets of hoses. The function is then determined by a control box, mounted in the cab of the tractor.

Always set the tractor's hydraulic flow at a lower rate and adjust it upward until the desired speed is reached. Excessive oil flow may damage the flow diverter cartridge.

Note: the hoses are paired by color and the following table show the operation when pushing oil into the corresponding hoses.

Table 2.1.1 Pulldozer Transformer Hose Marking

Machine		Marker	Function
Pulldozer Transformer 2470XL**	**Pulldozer Transformer 2470***	Long Red	Lift cylinder (lowers machine)
		Short Red	Lift cylinder (raises machine)
		Long Yellow	Left wing cylinder (opens wing-field)
		Short Yellow	Left wing cylinder (closes wing-transport)
		Long Green	Right cylinder (opens wing-field)
		Short Green	Right hand cylinder (closes wing-transport)
		Long Blue	Tilt cylinder
		Short Blue	Tilt cylinder
		Long Orange	Telescope cylinder (extends wheel width)
		Short Orange	Telescope cylinder (retracts wheel width)
		Long Purple	Trencher cylinder (lowers trencher)
		Short Purple	Trencher cylinder (raises trencher)
Pulldozer Transformer 2470 4 Remote Kit (optional)		Long Red	Lift cylinder (lowers machine)
		Short Red	Lift cylinder (raises machine)
		Long Yellow	Left wing cylinder (opens wing-field)
		Short Yellow	Left wing cylinder (closes wing-transport)
		Long Green	Right cylinder (opens wing-field)
		Short Green	Right hand cylinder (closes wing-transport)
		Long Blue	Tilt cylinder & Telescope cylinder (extends wheel width)
		Short Blue	Tilt cylinder & Telescope cylinder (retracts wheel width)
Pulldozer Transformer 2470XL 4 Remote Kit (optional)		Long Red	Lift cylinder (lowers machine)
		Short Red	Lift cylinder (raises machine)
		Long Yellow	Left wing cylinder (opens wing-field)
		Short Yellow	Left wing cylinder (closes wing-transport)
		Long Green	Right cylinder (opens wing-field)
		Short Green	Right hand cylinder (closes wing-transport)
		Long Blue	Tilt cylinder & Telescope cylinder (extends wheel width) & Trencher cylinder (lowers trencher)
		Short Blue	Tilt cylinder & Telescope cylinder (retracts wheel width) & Trencher cylinder (raises trencher)

*** Pulldozer Transformer 2470 comes standard with 5 hydraulic remotes**
**** Pulldozer Transformer 2470XL comes standard with 6 hydraulic remotes**

2.2 Hitch Options

Your Pulldozer Transformer comes with a choice of two different articulating implement hitches. Category 4 has draw pin sizes of 1-1/2 (optional) and 2" (interchangeable) and Category 5 has a standard draw pin size of 2-3/4".

Draw Pin Size (inches)	Hitch Required	Part NO
1.50	Flanged Bushing	27373
2.00	Category 4 ***** with 2" bushing installed, 2 Hole Pattern	27371
2.00	Category 4 ***** with 2" bushing installed, 3 Hole Pattern	27372
2.75	Category 5, 2 Hole Pattern	30128

The articulating joint reduces drawbar and draw pin wear thereby increasing the life of drawbar. This hitch allows more control, especially with GPS navigation.

Also important is the hitch height. For maximum articulation, the hitch must be set to the correct height based on your tractor's drawbar height as follows.

Holes Used	Drawbar Height (inches)
1,2	20.50
2,3	18.25
3,4*****	16.00
4,5	13.75

**** Factory setting***

For maximum articulation, a 3-5/8" clearance between the drawbar and hammer strap is also recommended. This will allow for 35 degrees front to back and 40 degrees side to side. This translates into a 10% grade (or 17-degree slope).

- NOTE: Exceeding this articulation range may damage or break the hitch -

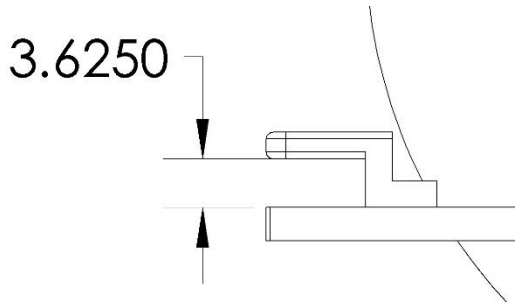

Figure 2.1 – Articulation clearance

2.3 Tires

Agricultural tread tires provide excellent flotation characteristics and minimal soil disturbance on packing and hauling applications. The speed and pressure on these tires should not exceed 30 mph (50 km/h) and 35 psi (241 kPa).

Check tire pressure and wheel torque on a regular basis.

Specifications	2470
Tire Size	1000/50R25
Tire Type	Goodyear Super TerraGrip XT HF3
Rim Size	25
Tire Pressure	**35 psi**
Wheel Nut Torque	**280 ft-lb**

2.4 Lubrication

There are several pivot points on your Pulldozer that require lubrication for continuing performance. Lubricating to be done on a regular basis. The grease points are in the following areas:

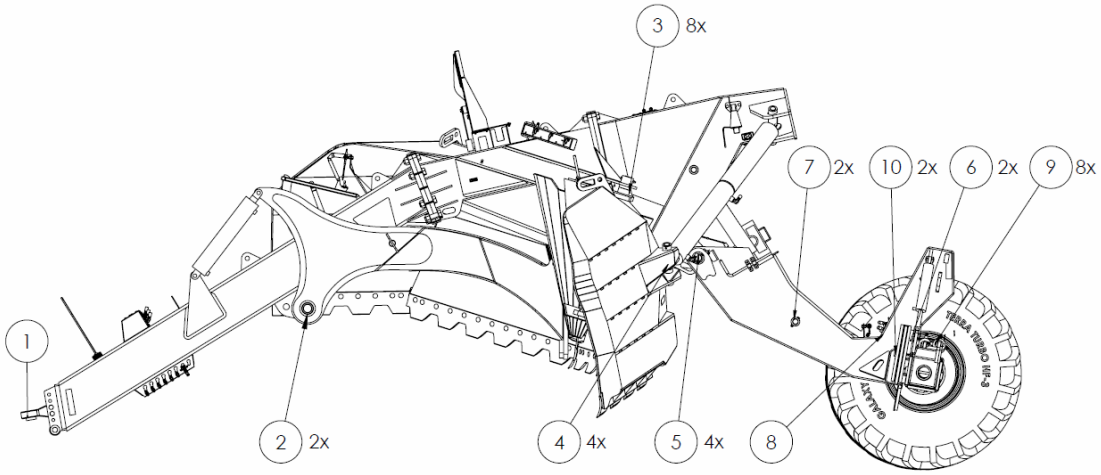

Figure 2.2 – Grease points locations

		Location	Interval
1	Hitch	Each side of casting	20 hours
2	Trencher Pivot	Bottom	10 hours
3	Wing Pivot	Top and Bottom	10 hours
4	Wing Cylinder	Ball Joint Ends of Cylinders	10 hours
5	Blade Pivot	Front of Main Frame	10 hours
6	Rear Tilt Ring	Rear side of Axle	20 hours
7	Lift Cylinder	Facing towards top	20 hours
8	Axle Pivot	Behind angle indicator cable	10 hours
9	Telescoping Axle	End of Axle	10 hours
10	Front Tilt Ring	Front side of Main Frame	10 hours
11	Wheel Hub	Remove dust cap and pack with grease	100 hours or seasonally

Grease using Mobil UNIREX EP2 GC-LB or equivalent.

2.5 Blade Options

Efficient machine applications require the proper dozer attachments for the job at hand. Dozers are used in a wide variety of construction and maintenance applications for which several blade types have been developed. Soil characteristics, moisture content, compaction, ambient temperatures, and terrain are just some of the variables that will influence proper blade selection for optimal dozing productivity.

Using the right blade for the job will result in fuel savings, higher productivity, less wear tear on the tractor and a better finished product. Some dozer blades are designed for a specific application, while others have a broader range of uses and are more often employed. The Pulldozer Transformer comes with a choice of two blades. See section **3.1 Component Information (2470 & 2470XL)** for part numbers for desired blade.

1. Regular Blade: General purpose operation. It has a penetration force of 1000 lb./ft. This is the factory standard.

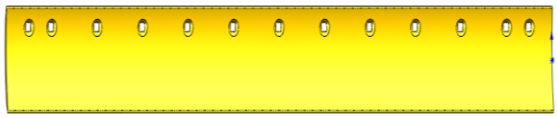

2. Notched Blade: More suitable for higher penetration requirements. It can withstand penetration force up to 2000 lb./ft. Operators have noted that this blade leaves the field in better condition for immediate seeding.

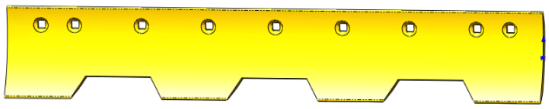

NOTE: These blades wear over time. Contact your nearest Pulldozer representative to order any additional blades.

2.6 Trencher Option

Trenching will drain your land fast; simply set the Pulldozer Transformer at ground level, and lower the trencher unit to the required depth and go.

As the trench is cut the dirt flows to the sides and is drawn outward by the Pulldozer Transformer. There are no windrow ridges of dirt left on the sides of the trench. Thus, your land will drain faster and with no side ridges you'll be able to work through the trench with most farm equipment.

Figure 2.3 – Trencher in retracted position

Use the dirt from the trench to elevate low areas. When the Pulldozer Transformer is full simply raise the blade to dump and level the dirt. The Trencher can keep cutting while the Pulldozer Transformer is dumping and leveling.

The Trencher uses the full weight of the Pulldozer Transformer to keep it in the ground and works when the ground is wet or dry. Hardened cutting edges ensure long life.

In retracted position the Trencher does not interfere with normal operation. The trencher adds approximately 4,000 lbs. of weight to the Pulldozer.

NOTE: On standard machines, regular trenching can be done by tilting the blade to one side, and lowering the tip into the ground.

Figure 2.4 – Trench after the operation with no wind row ridges of dirt left

Depth Penetration:

The trencher comes with a depth indicator showing the position of the trencher tip relative to the blade tip. This allows the operator to set the required trenching depth.

	Clean Depth	Max Depth	Width
24 Foot	Up to 28"	Up to 42"	36" wide

Table: Depth Penetration for 2470 Pulldozer Transformer

The maximum penetration of the trencher causes back filling of the trench if the blade is in contact with the ground. Lift the blade up for the regular trenching technique. For clean trenching, use in the "green" range of the depth indicator.

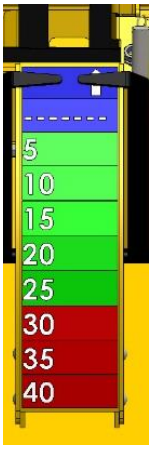

2.7 GPS Option

This GPS mounting tower kit **(247631)** is designed to be installed on any Pulldozer where GPS functionality is desired. On new machines one mounting location is provided: in the center of the blade behind the angle indicator.

Before starting, ensure that all required components are present:

ID#	Description	QTY
24761	GPS Mounting Tower	1
13806	3/8" x 1-1/4" Bolt	4
11667	3/8" Flat washer	4
10271	3/8" Serrated flange nut	4

The following tools are required to install this kit:

Lifting device
Impact socket, 9/16"
Hand wrench, 9/16"

Before installing the mounting bracket, install the GPS antenna to the top (hardware is not supplied). Use the nuts and bolts to hold the tower in place.

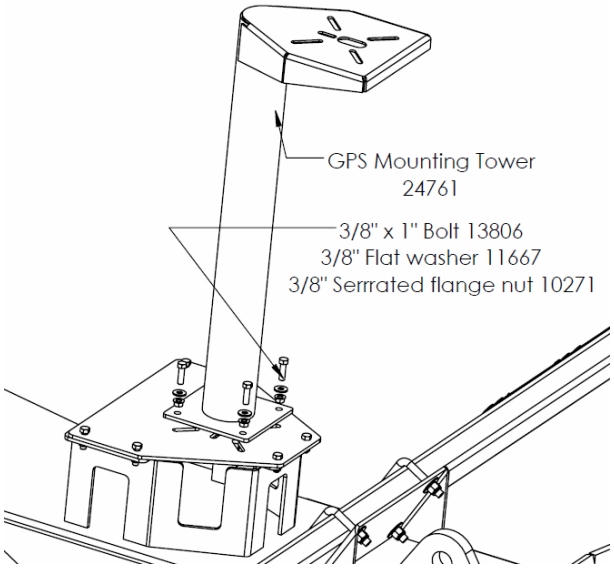

Figure 2.5 – Installing GPS tower

Route the electrical wires to the tractor cab.

3 ASSEMBLY & PARTS MANUAL

3.1 Component Information

Hitch **27210** Weight = 1675 lb.	**Trencher Hitch** **27394** Weight = 2038 lb.
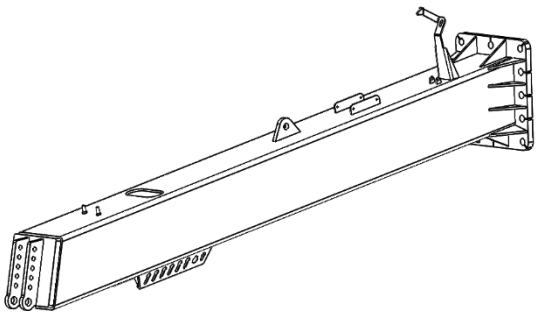	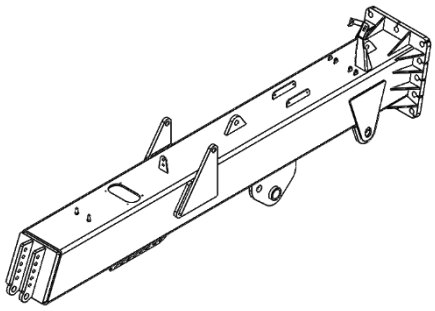
Middle Blade **27216** Weight = 5947 lb.	***Back Wing Support*** **30011** Weight = 4320 lb.
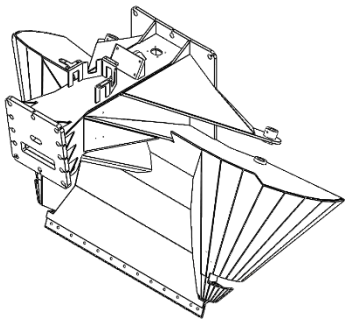	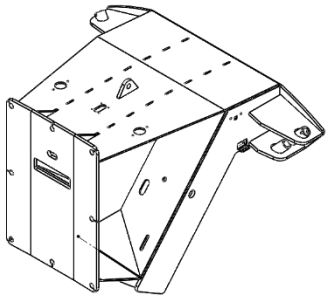
Left Hand Wing **27213** Weight = 3545 lb.	***Right Hand Wing*** **27214** Weight = 3545 lb.
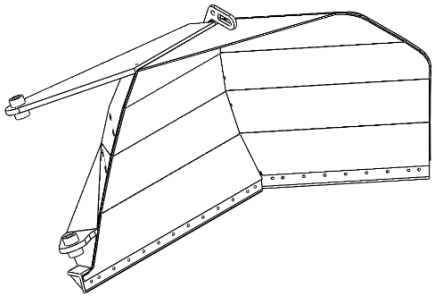	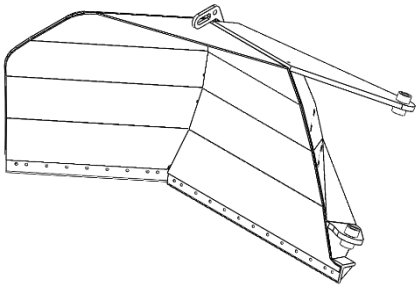

Trencher ***23336*** Weight = 1600 lb.	***Main Frame Weldment*** ***30403*** Weight = 3122 lb.
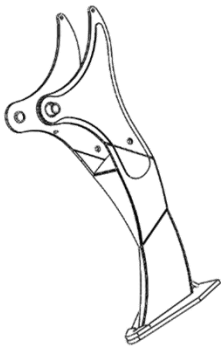	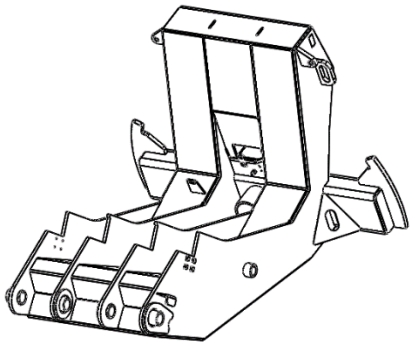
Back Axle ***30404*** Weight = 879 lb.	***Left Hand Telescoping Tube*** ***29633*** Weight = 598 lb.
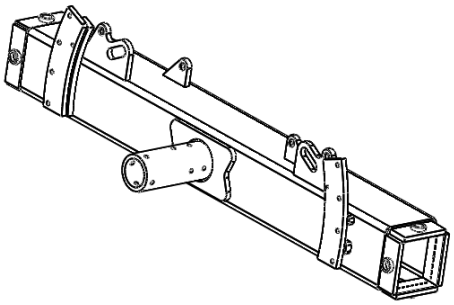	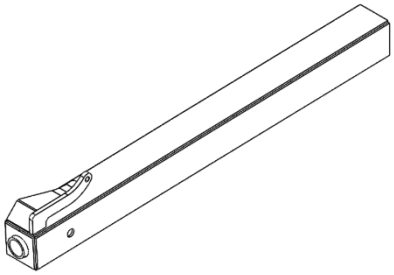
Right Hand Telescoping Tube ***29627*** Weight = 682 lb.	***Safety Chain Pin*** ***27224***
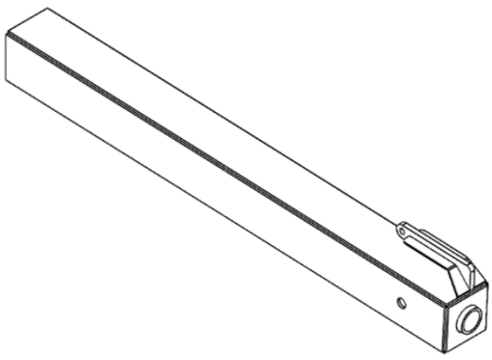	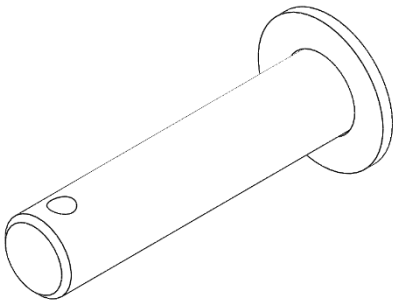

Safety Chain Pin Bushing *27245*	*Safety Chain Washer* *27244*
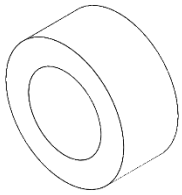	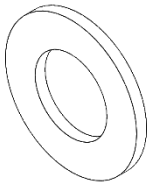
Front Bulkhead Plate *30034*	*Hydraulic Hose Bracket* *27204*
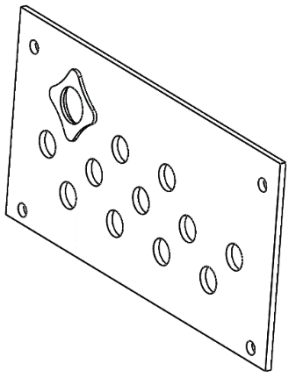	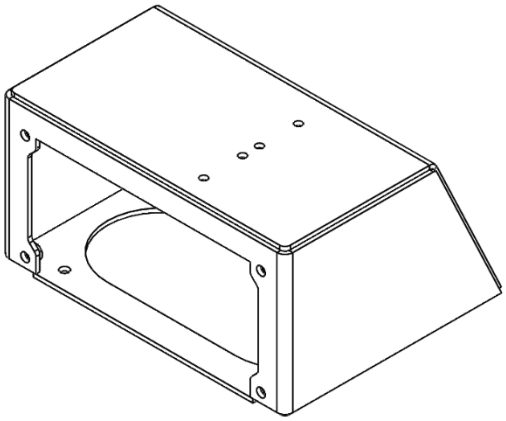
Trench Depth Indicator Bracket *27200*	*Trench Depth Indicator Linkage* *23341*
	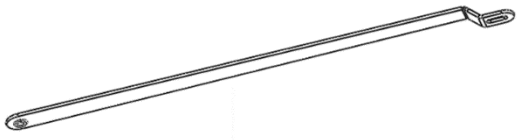

Trench Depth Indicator Arm ***22137***	***Height Indicator*** ***27212***
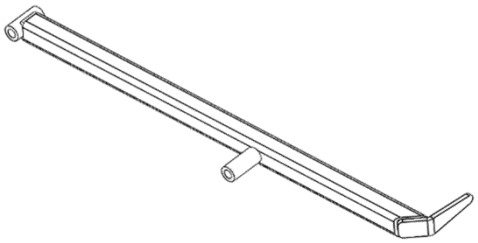	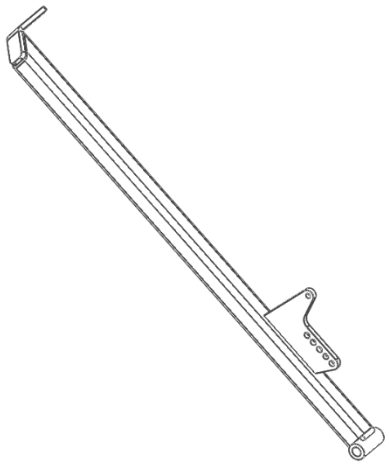
Angle Indicator Axle Pivot ***27199***	***Trench Safety Pin*** ***22136***
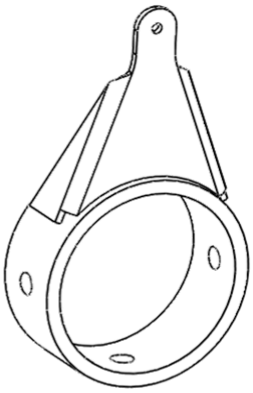	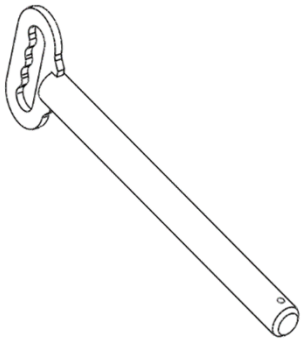
Angle Indicator Bracket ***27201***	***Top Center Laser Mount Plate*** ***27237***
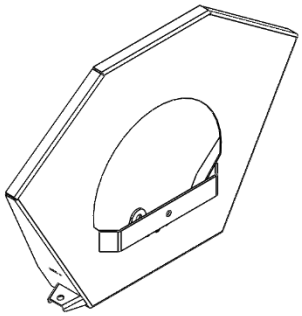	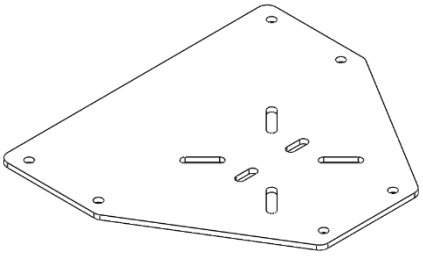

Level to Ground Indicator *27202*	*Angle Indicator Needle* *27203*
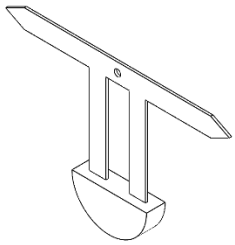	
Wing Angle Indicator Tube *27223*	*Grade Indicator Needle* *27215*
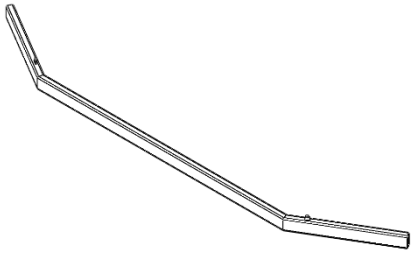	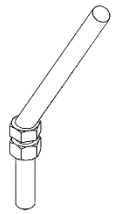
Right Light Bar *27227*	*Left Light Bar* *28781*
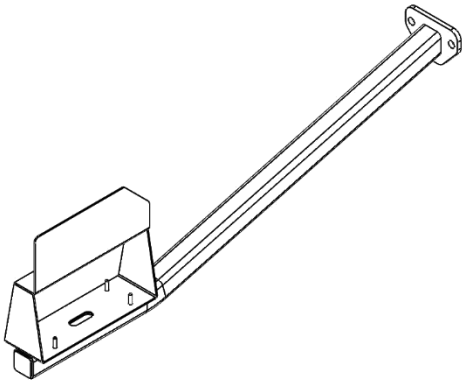	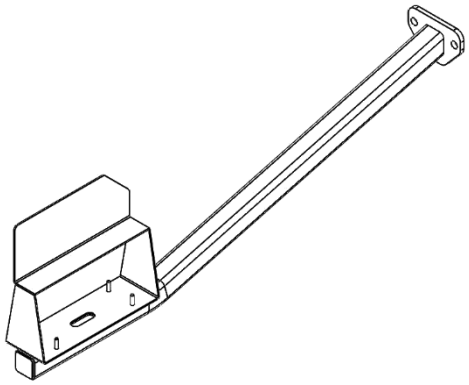
Rear Bulkhead *28648*	*Lift Cylinder Hose Bulkhead* *30405*
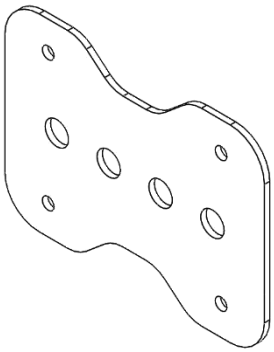	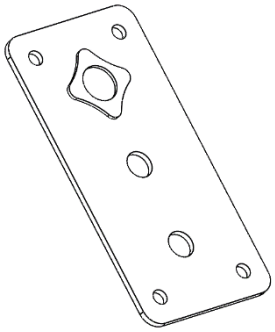

Rear tilt abrasion plate 30140	***Hydraulic Hose Access Plate 27246***
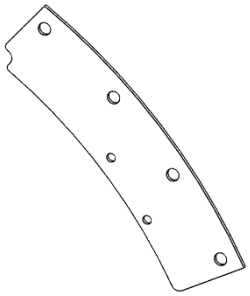	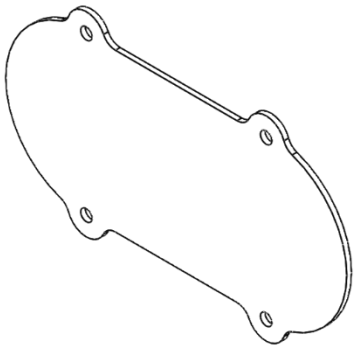
Right Hand Lift Cylinder Safety Lock 27226	***Left Hand Lift Cylinder Safety Lock 27225***
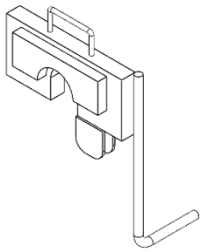	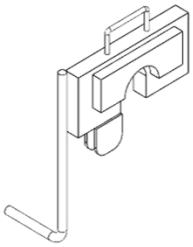
Trencher Pivot Pin (220991) Wing Pivot Pin (26702) Wing Hydraulic Cylinder Pin (26576) x2 Lift Pivot Pin (27134) Lift Hydraulic Cylinder Base Pin (22912) Lift Hydraulic Cylinder Shaft Pin (26576)	***Blade Cutting Edge*** ***Plain: 20430 (Main Blade x 3)/20428 (Wing Blade x 2)*** ***Serrated: 26573 (Main Blade x 3) / 26572 (Wing Blade x 2)***
	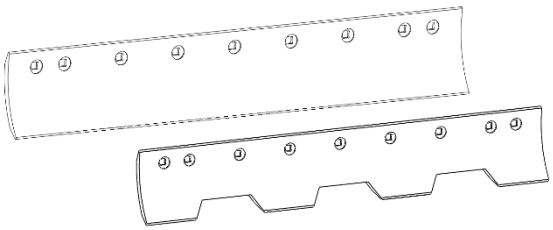

Tires & Rim ***See Section 3.2 d***	***Hub & Spindles*** ***See Section 3.2 c***
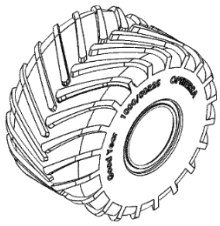	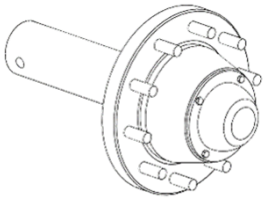
Articulating Hitch ***27372 (Cat. 4) / 30128 (Cat. 5)***	***Spring Hose Holder*** ***179671***
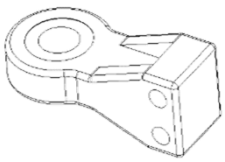	
Lights ***S/N PD1315 & Down*** ***Right Light (22969) / Left Light (22968)*** ***S/N PD1316 & Up*** **Right Light (31088)/ Left Light (31087)**	***Heavy Duty Steel Clamp*** ***27267***
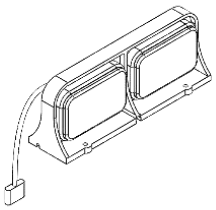	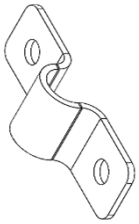
Tilt Ring Spacer ***30147***	***Right Hand Tilt Ring Cover*** ***30145***
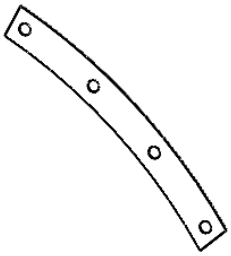	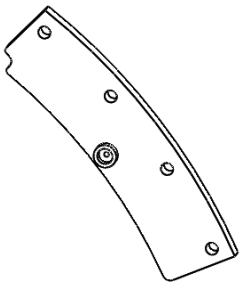

Tilt ring *30406*	*Left Hand Tilt Ring Cover* *30142*
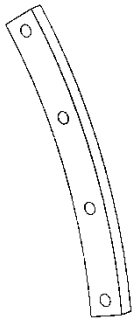	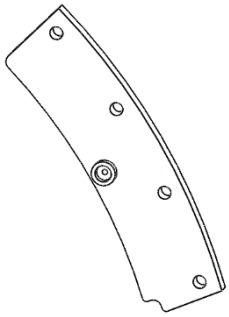
Press in Bushing **1" ID *(23708)*/1-1/4" ID *(23711)***	**2470 Height Indicator Bracket** ***32258***
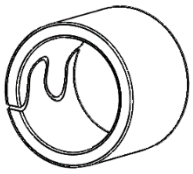	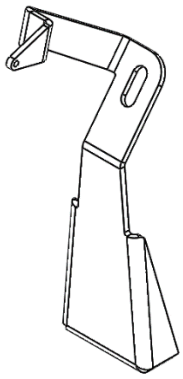

Hydraulic Cylinders:
A: 20431 (5" x 24" Trench), 20808 (Seal Kit)
B: 26579 (6" x 32" Wing), TBA (Seal Kit)
C: 23310 (5" x 24" Lift), 20808 (Seal Kit)
D: 26577 (3" x 12" Tilt), 20807 (Seal Kit)
E: 30460 (4" x 36" Telescope), 24704 (Seal Kit)

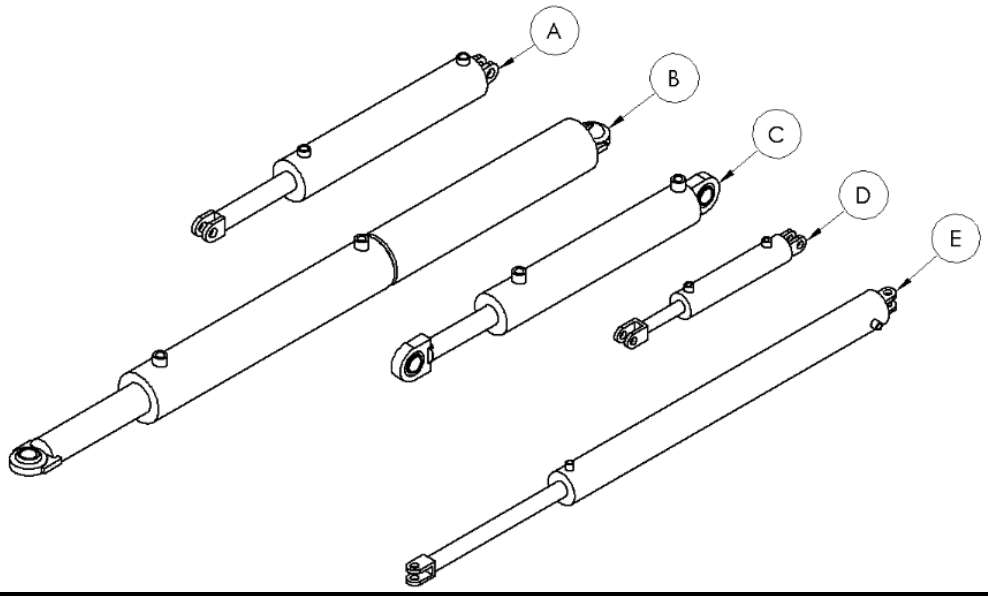

3.2. Body Assembly

NOTE: Parts may not be exactly as shown.

a) Install both left (29633) and right-hand telescoping tube (29627) into back axle weldment (30404)

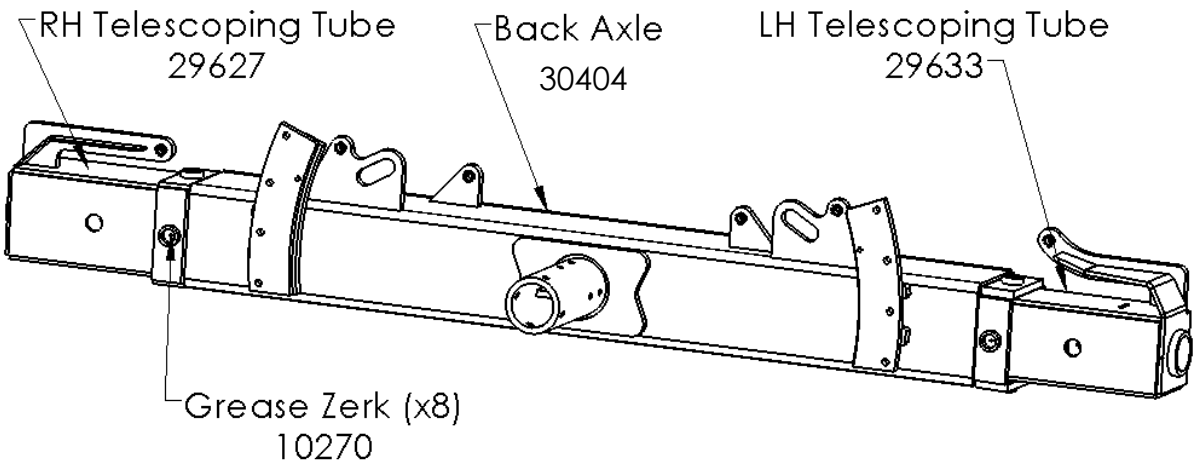

Figure 3.1 – Back Axle Attachment

b) Install main frame weldment (30403) to the back axle along with angle indicator axle pivot (27199). Slide the axle into the main frame from the rear of the machine. Place the axle collar weldment onto the axle after sliding through the main frame. Then secure the axle in place with four 3/4" x 2-1/2" bolts (14470) and four 3/4" stover lock nuts (11823). Install 1/8" 45º grease zerk on rear of main frame weldment.

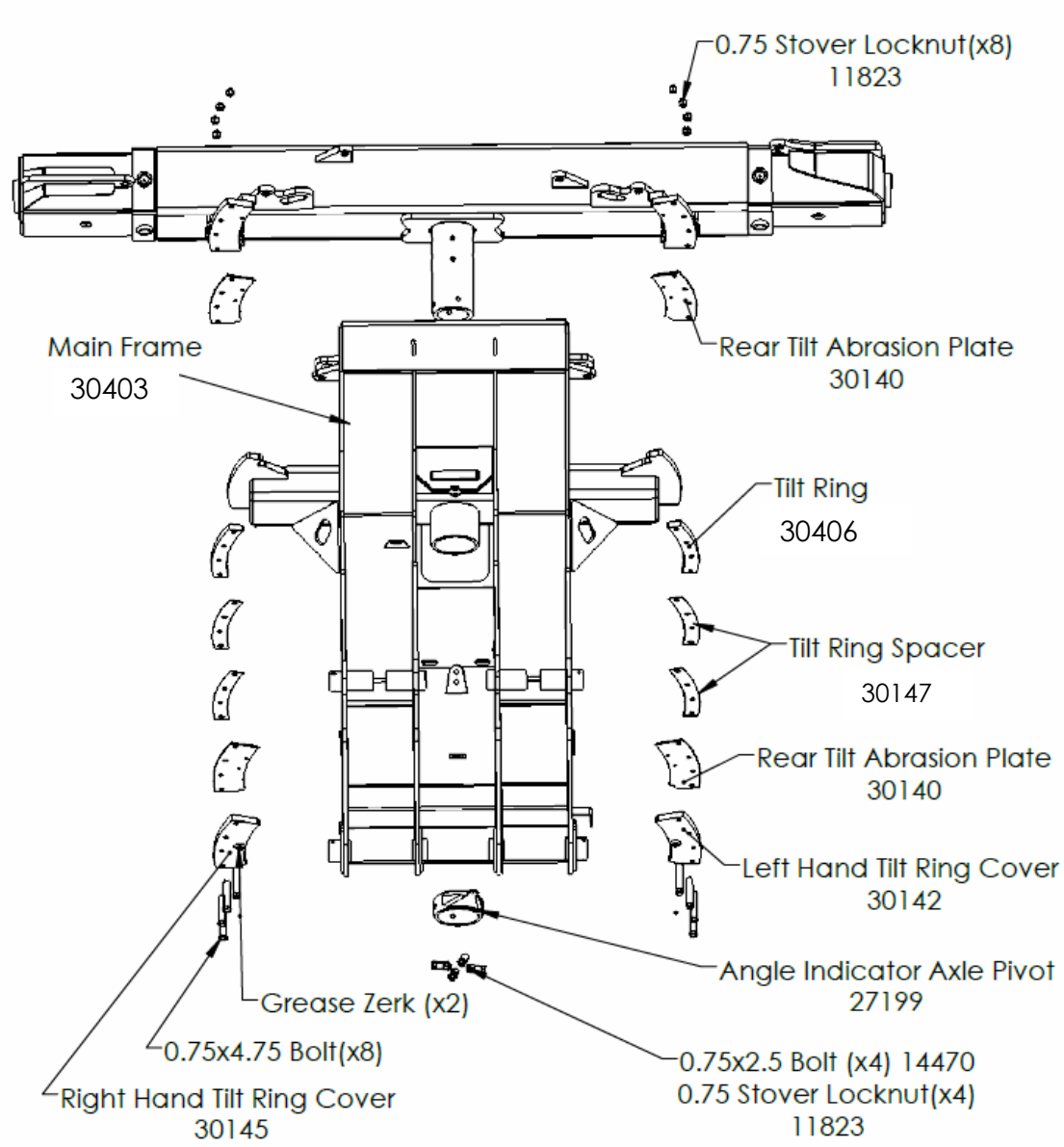

Figure 3.2 – Main Frame Attachment

c) Assemble the hub and spindle:

- Insert rear bearing (3) into hub housing. Install the seal (6) with rubber lip to the outside (as shown). Lightly tap into place with rubber mallet.
- Pack bearing full of grease (Mobil UNIREX EP2 GC-LB). Run grease around the inside of the hub with a spatula to fill the opening.
- Insert the spindle (2) as shown, with the shoulder up against the rear bearing.
- Insert front bearing (4), washer (9), and castle nut (8).
- Rotate the spindle a few times and then repack with grease.

- REPEAT FOR SECOND HUB -

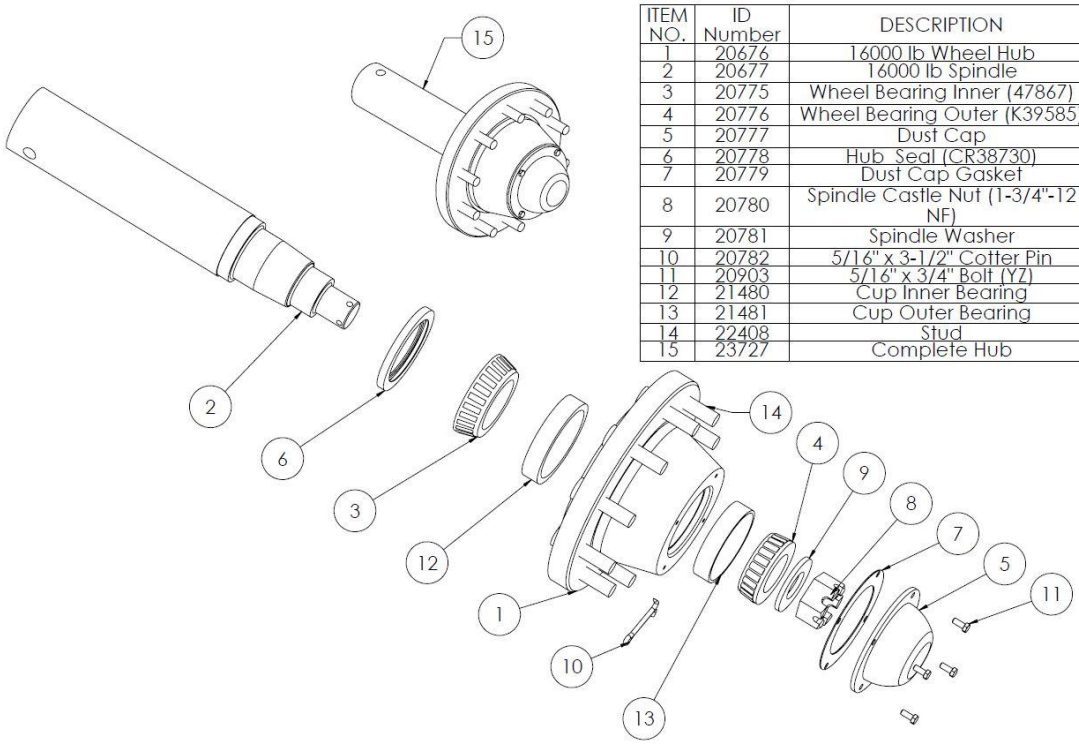

ITEM NO.	ID Number	DESCRIPTION	QTY.
1	20676	16000 lb Wheel Hub	1
2	20677	16000 lb Spindle	1
3	20775	Wheel Bearing Inner (47867)	1
4	20776	Wheel Bearing Outer (K39585)	1
5	20777	Dust Cap	1
6	20778	Hub Seal (CR38730)	1
7	20779	Dust Cap Gasket	1
8	20780	Spindle Castle Nut (1-3/4"-12 NF)	1
9	20781	Spindle Washer	1
10	20782	5/16" x 3-1/2" Cotter Pin	1
11	20903	5/16" x 3/4" Bolt (YZ)	4
12	21480	Cup Inner Bearing	1
13	21481	Cup Outer Bearing	1
14	22408	Stud	10
15	23727	Complete Hub	1

Figure 3.3 – Hub and spindle assembly

- Install both spindles to the axle using 3/4” x 6-1/2” (20787) bolts and nylon lock nuts (10007).
- Tighten the castle nut, while rotating hub, until the bearings are tight, and then back off one notch. Fix in place using cotter pin (10).
- Install the dust cap (5), and gasket (7), using four 5/16” x 3/4” bolts (11).

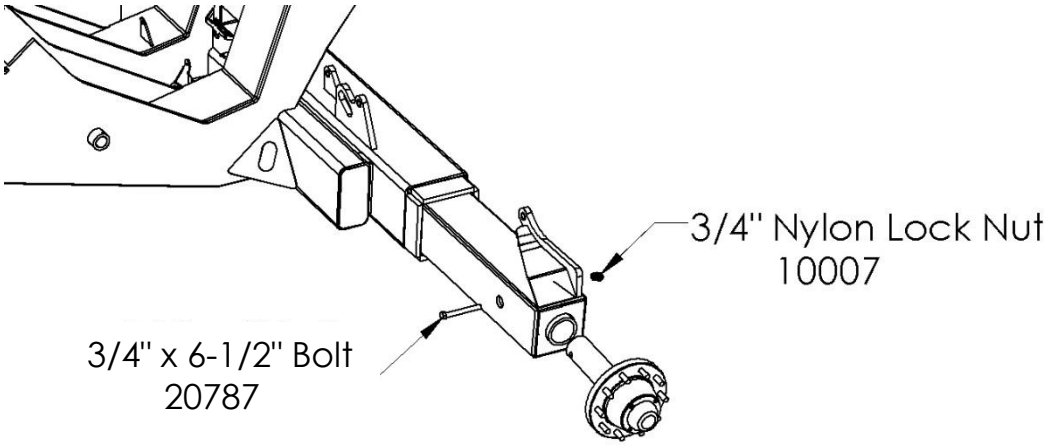

Figure 3.4 – Spindle to axle assembly

d) Fasten the hub to the bushing using spherical washers (21151) and wheel nuts (20783). The flat side of the spherical washers should contact the surface of the rim with the spherical side against the wheel nuts.

NOTE: Valve stem towards outside

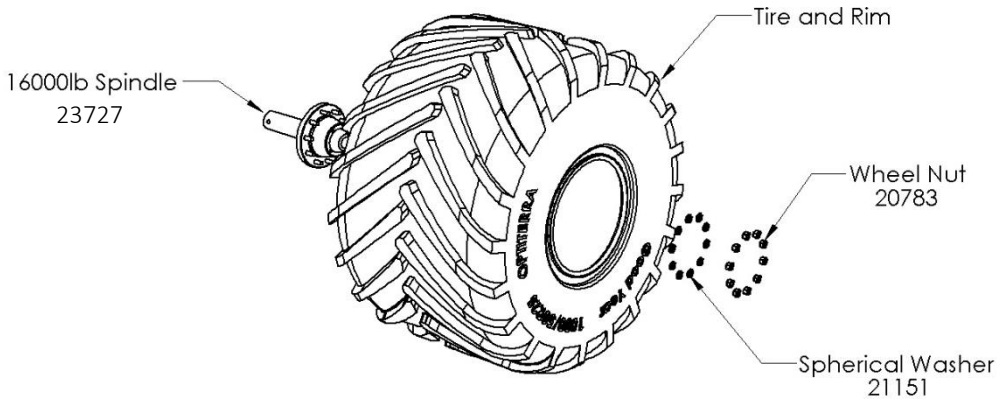

Figure 3.5 - Hub and wheel assembly

Make sure that the tires are inflated to their correct pressure and the wheel nuts are torque properly (see chart below). Remove the blocks from the main frame and allow the frame to sit on the wheels.

Specifications	2470
Tire Size	1000/50R25
Tire Type	Goodyear Super TerraGrip XT HF3
Rim Size	25
Part# (Tire and Rim)	26469
Tire Pressure	35 psi
Wheel Nut Torque	280 ft-lb

e) Install middle blade (27216) and back wing support (30011) using 1-1/2" bolts (20654), flat washers on both sides (20434), and 1-1/2" nuts (20654). **Lubricate and Torque to 1800 lbs.**

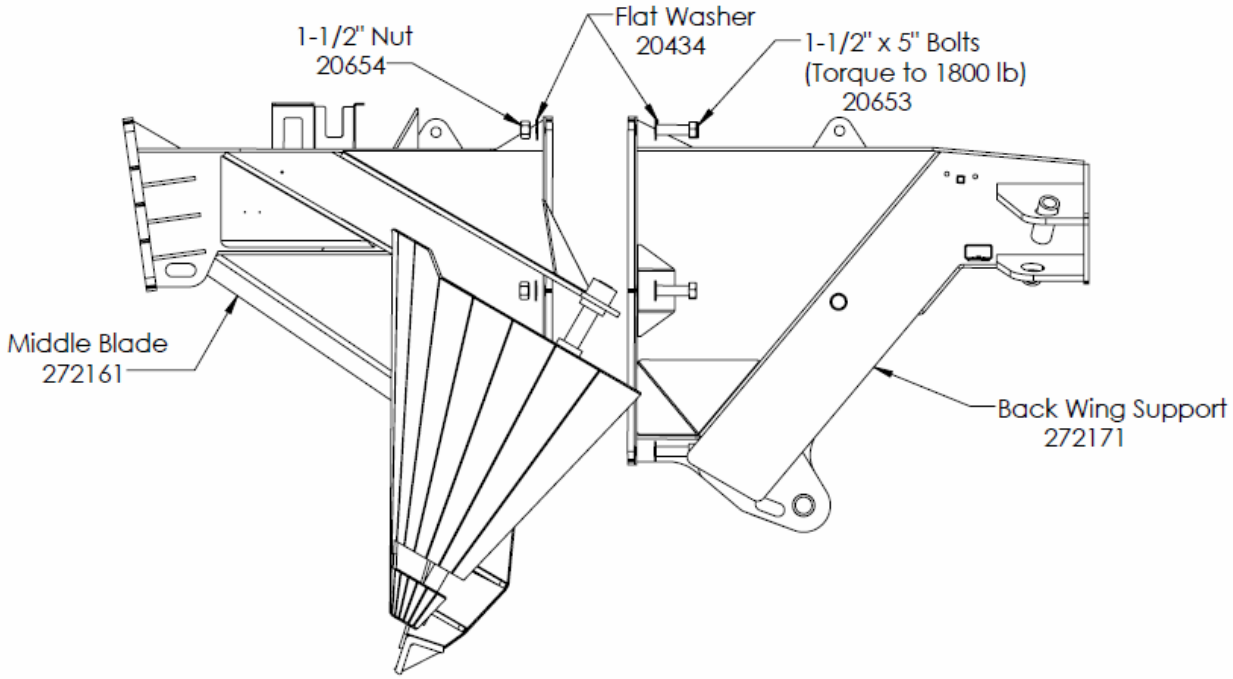

Figure 3.6 - Middle blade and back wing support assembly

f) Assemble the previous assembled back axle assembly to the middle blade weldment (27216) by rolling into middle blade. Install two pins (27134) along with the bolts (14255), nylon locking nut (10364), and grease zerk (16364).

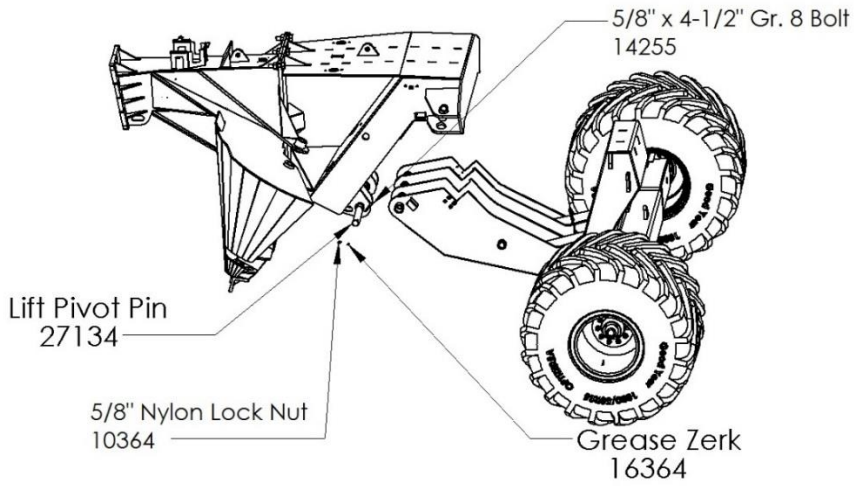

Figure 3.7 - Middle blade and back axle assembly

g) Install trencher hitch weldment or hitch weldment (27210) to previous assembly. Use bolts (20653), washers (20434), and nuts (20654) to install hitch to middle blade. See section 3.3 for installation of lift hydraulic cylinder.

Note: These bolts must be lubricated and torqued to 1800 ft-lb.

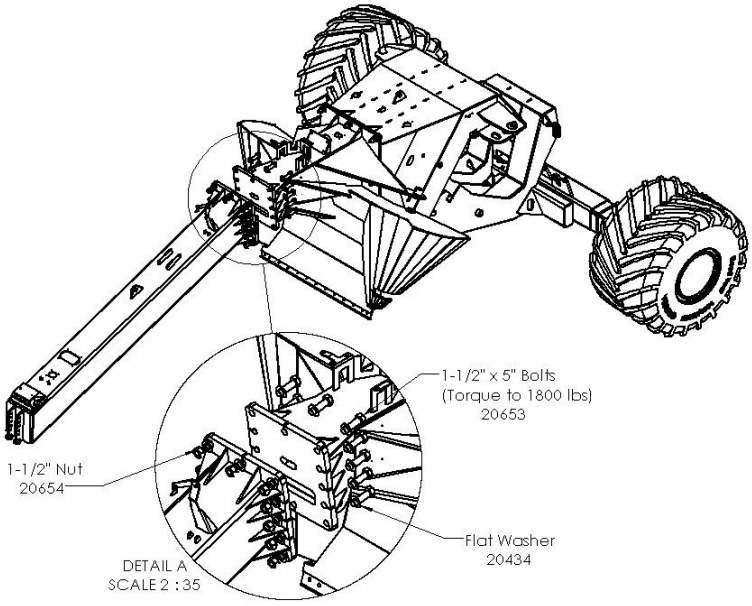

Figure 3.8 - Middle blade and hitch assembly

h) Install right hand wing weldment (27214) to middle blade assembly. Install with two pins (26702), two bolt (13966), two nylon locking nut (10364), & four grease zerks (16364).

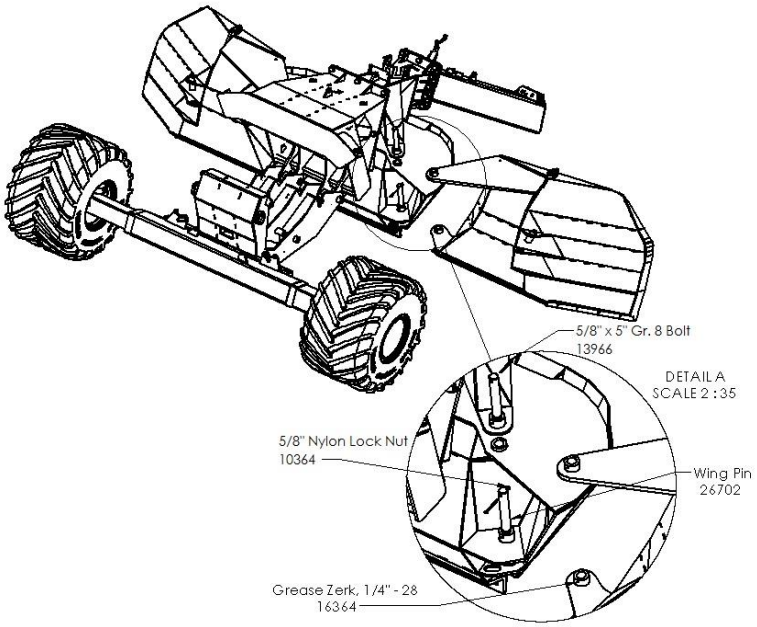

Figure 3.9 - Right hand wing assembly

i) Install left hand wing weldment (27213) to middle blade assembly. Install with two pins (26702), two bolt (13966), two nylon locking nut (10364), & four grease zerks (16364).

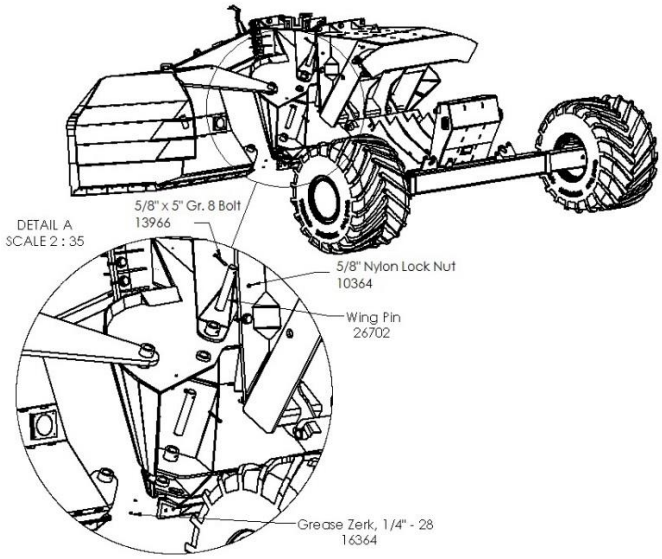

Figure 3.10 - Left hand wing assembly

j) Bolt the articulating hitch to the front of the hitch subassembly using two 1" x 7-1/2" NF Gr. 8 bolts (21103), and stover lock nuts (21104). Install safety chain pin (26880), safety chain bushing (26714), safety chain washer (26712), one bolt (10804), stover lock nut (14393), and safety chain (26609).

Set to the desired height (use closest setting):

Holes Used	Drawbar Height (inches)
1,2	20.50
2,3	18.25
3,4 *	16.00
4,5	13.75

** Factory Setting*

Make sure that the***. lettering is on the top side.*** The Category 4 hitch has two available pin sizes, 1-1/2" and 2". Install the desired size by dropping in the bushing adapter from the top. Make sure that the bushing sticks out on the bottom.

Draw Pin Size (inches)	Hitch Required	Part NO
1.50	Flanged Bushing	27373
2.00	Category 4 * with 2" bushing installed, 2 Hole Pattern	27371
2.00	Category 4 * with 2" bushing installed, 3 Hole Pattern	27372
2.75	Category 5, 2 Hole Pattern	30128

** Comes supplied with both 1-1/2" and 2" bushings*

Note: (21103) bolts must be torqued to <u>900 ft-lb</u>.

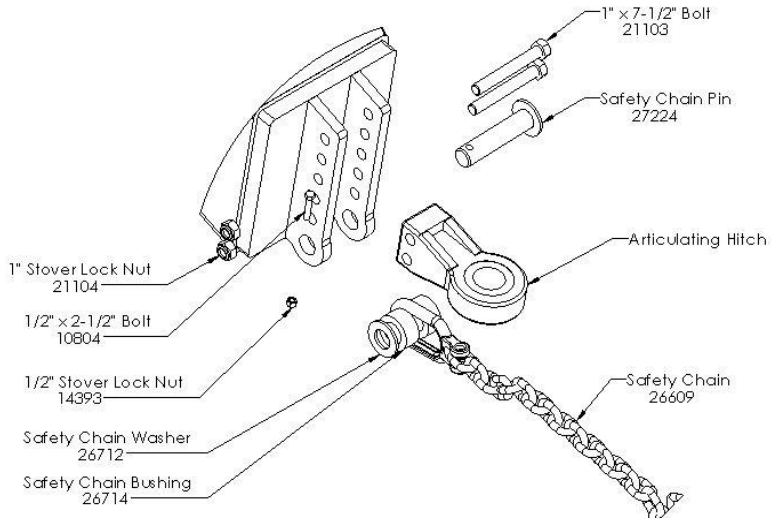

Figure 3.11 - Bull Pull & Safety Chain Attachment

k) Bolt the spring hose holder (179671) to the front hitch as shown, using a 5/8" flat washer (13975) and nylon lock nut (10364). Bolt hydraulic hose holder bracket (27204) to front hitch using 3/8" x 1" bolts (13806). Install 5/16” x ¾” bolt (20903) to hydraulic hose holder bracket. See hydraulic assembly for Front Bulkhead Plate installation.

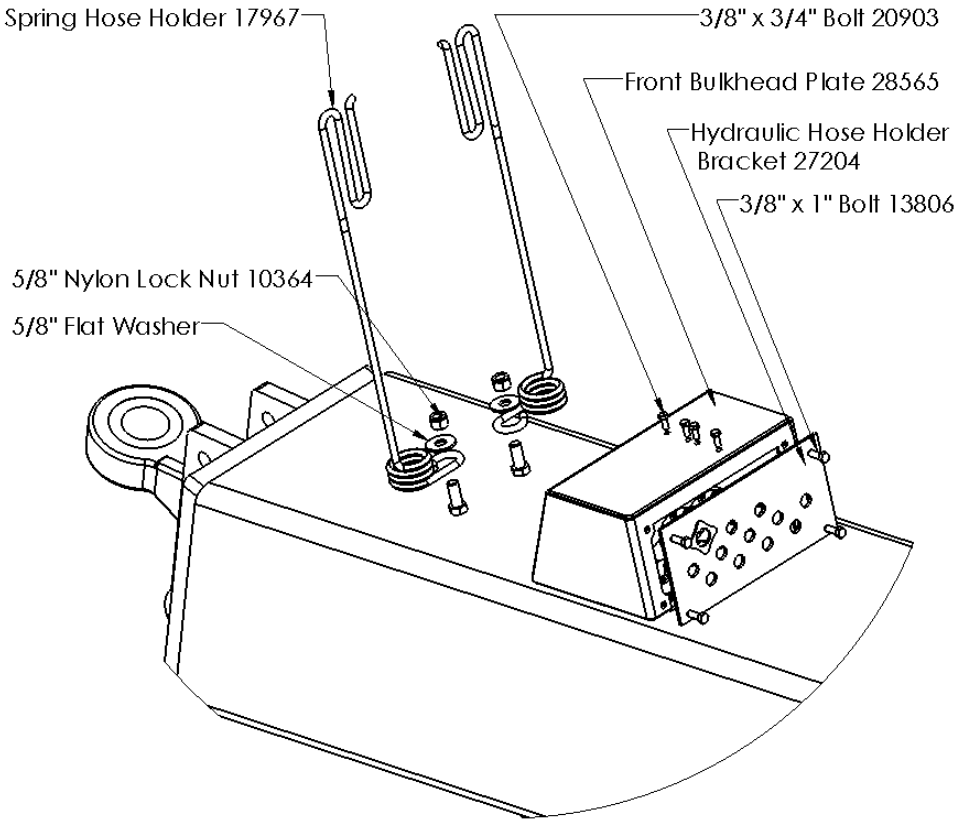

Figure 3.12 - Spring hose holder & hose bulkhead box attachment

l) Bolt the Trench Depth Indicator (27200) to hitch as shown, using four 3/8" x 1" carriage bolts (15718) and four 3/8" stover flange nuts (17844). Install height indicator (27229) to hitch using 1/2" x 3-1/4" bolt (11782) and 1/2" nylon lock nut (10241). Install spring (11787) to height indicator and hitch.

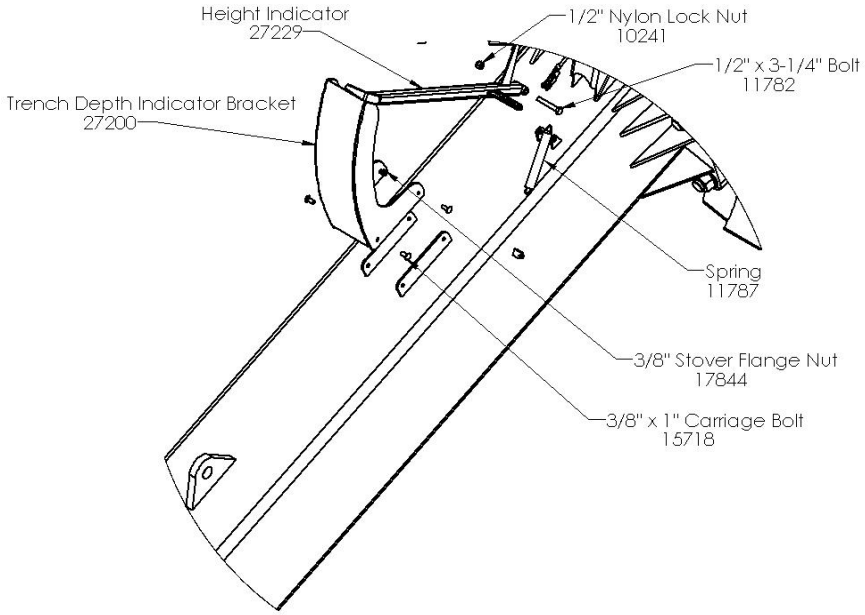

Figure 3.13 - Height indicator & trench depth indicator attachment

m) Bolt on Height Indicator Bracket (32258) to hitch as shown below: Use 3/8" x 1-1/4" bolts (10253), 3/8" flat washers (11667) and 3/8" nylon lock nut (10806).

S/N PD1310 & Above ONLY

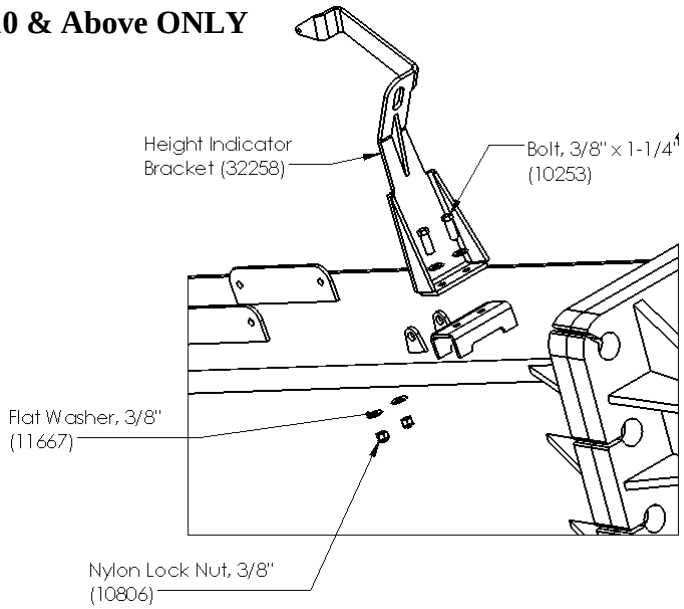

n) Bolt down angle indicator bracket (27201) and top center laser mount (27237) to middle blade using four 3/8" x 1-1/4" bolts (10253), two 3/8" x 1" (13806) and six 3/8" stover flange nuts (17844). Bolt level-to-ground indicator (27202) to angle indicator bracket using 5/8" x 2" bolt (26607) and 5/8" nylon lock nut (10364). Bolt angle indicator needle (27203) to angle indicator bracket using flail bushing (10005), 3/4" x 4" bolt (15578), and 3/4" nylon lock nut (10007). Install spring (11787) from angle indicator needle to angle indicator bracket.

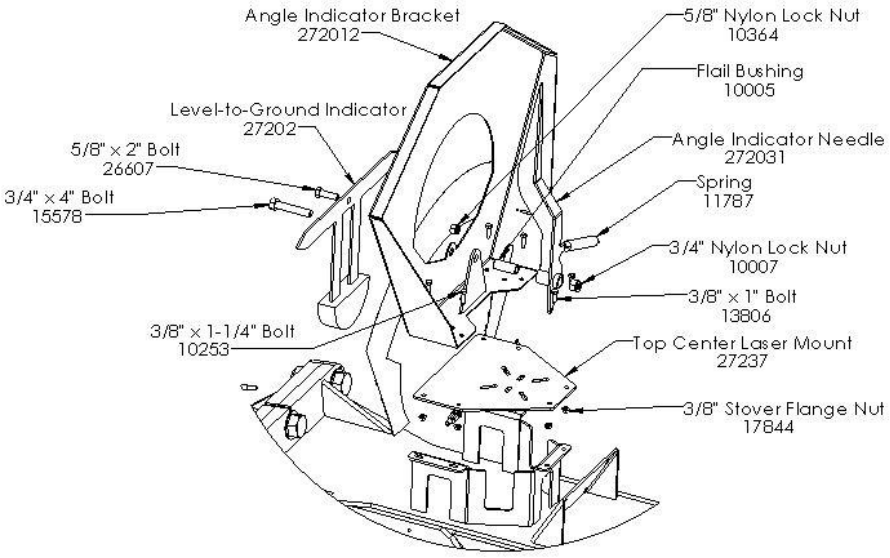

Figure 3.14 - Angle indicator attachment

o) Bolt wing angle indicator tube (27223) to the middle blade assembly also using two U-bolts (26608), four 1/2" flat washers (11668), and four 1/2" nylon lock nut (10241).

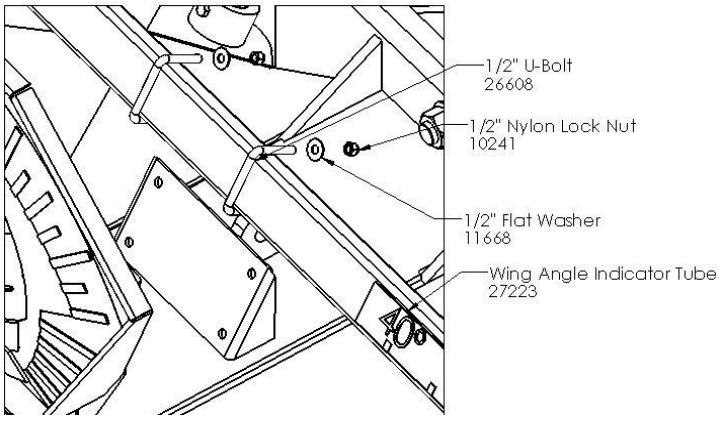

Figure 3.15 - Wing angle indicator tube & GPS cover attachment

p) Install grade indicator needle (27215) onto both right and left hand wings. Make sure it doesn't hit wing angle indicator tube. Make sure it is parallel to top edge as shown below.

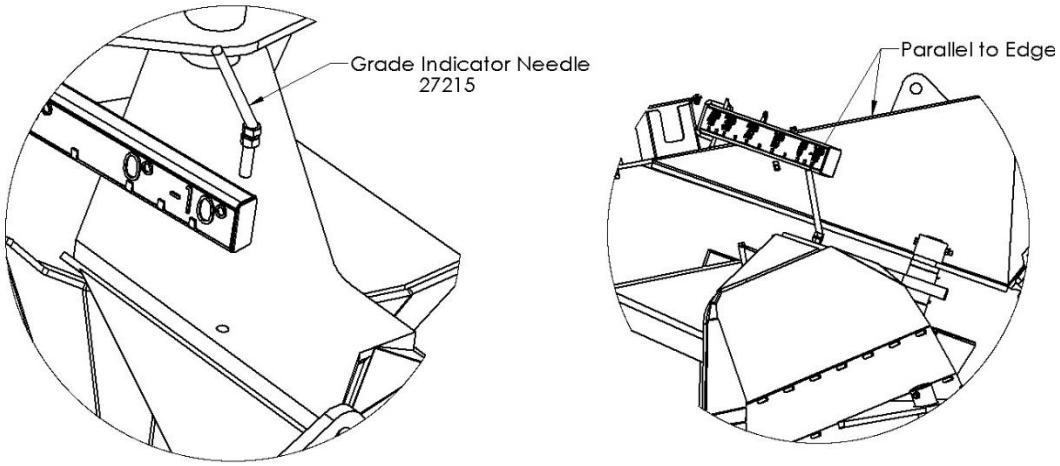

Figure 3.16 - Grade indicator needle attachment

q) Bolt the manual holder box (22409) to the middle blade assembly as shown, using four 1/4" x 3/4" bolts (11809), four flat washers (11666), and four 1/4" stover flange nuts (11812).

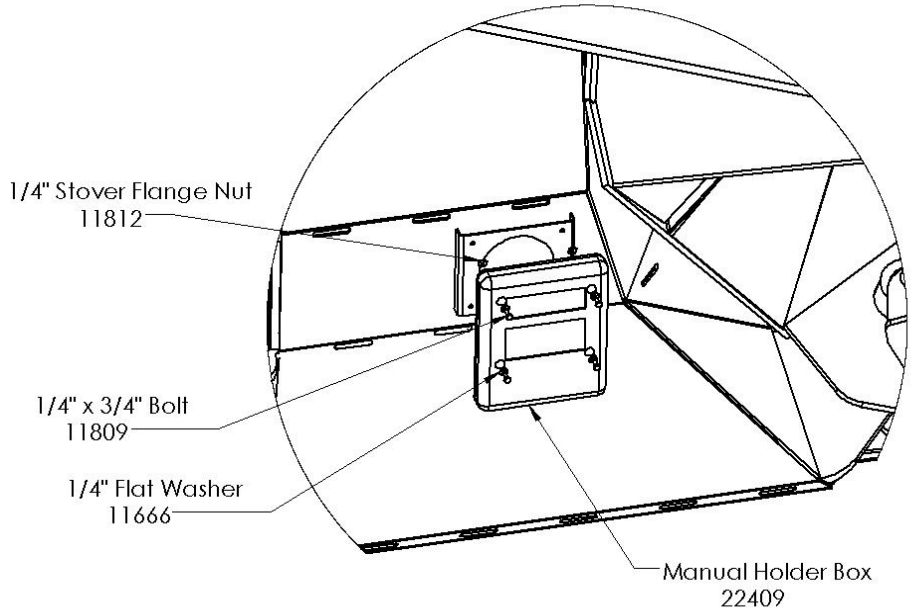

Figure 3.17 - Manual holder box attachment

r) Install grommet (16397). Install lift cylinder hose bulkhead plate (30405) using four 3/8" x 1" bolts. Install grommet (30036).

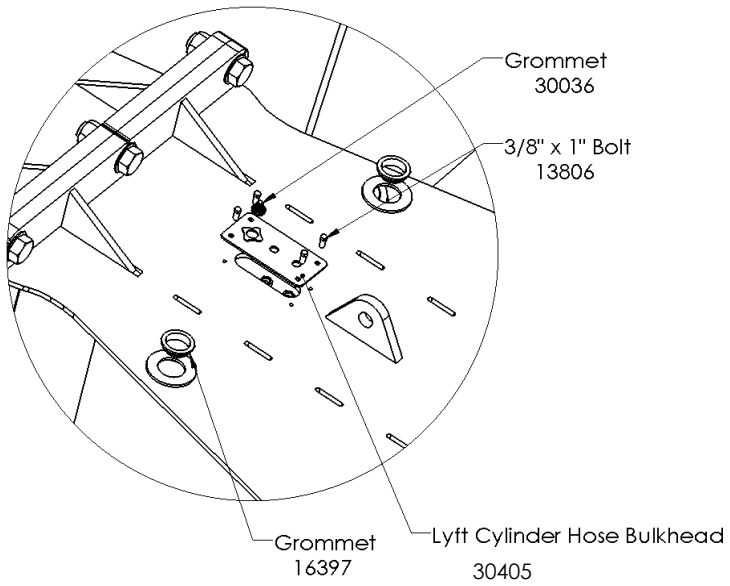

Figure 3.18 - Lift cylinder hose bulkhead plate and grommets attachment

s) Install both right (27226) and left hand lift cylinder safety lock (27225) as shown, using heavy duty steel clamps (27267), four 3/8" x 1-3/4" bolts (16040), four 3/8" nylon lock nuts (10806), and a rubber handle (10290).

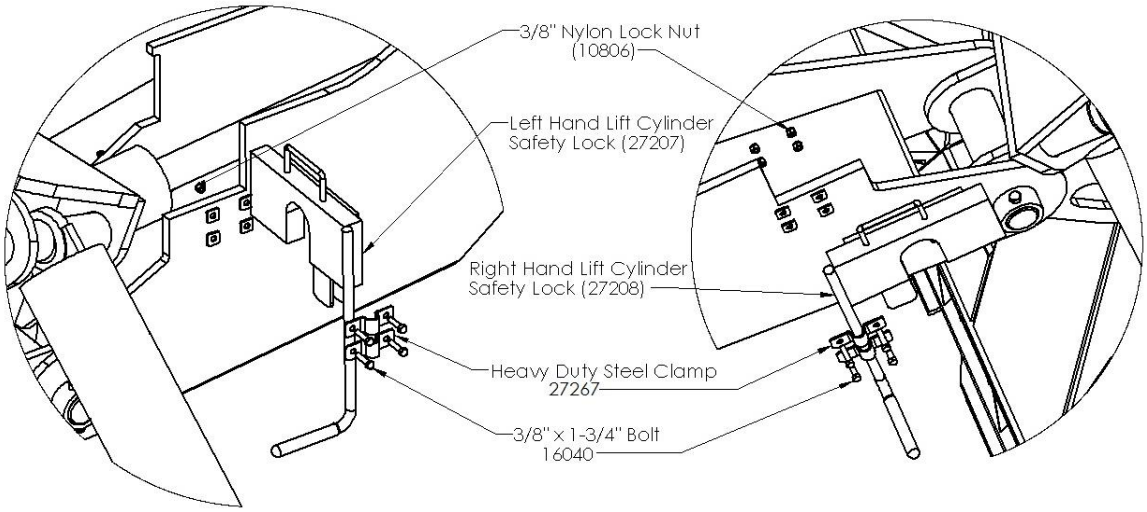

Figure 3.19 -Lift cylinder safety locks attachment

3.3 Hydraulics Assembly

NOTE: Hydraulic cylinders must be attached at the top first then pulled down into position. A hydraulic schematic is attached at the back of the Hydraulics Assembly Section.

There are four remotes needed for both the 2470 Pulldozer Transformer and 2470XL Pulldozer Transformer.

a) Install two 6" x 32" wing hydraulic cylinders (26579) on both the right & left side, with the cylinder pin (26576), 1/2" x 3-3/4" bolt (15397), and nylon lock nut (10241). Make sure ports are facing upwards as shown.

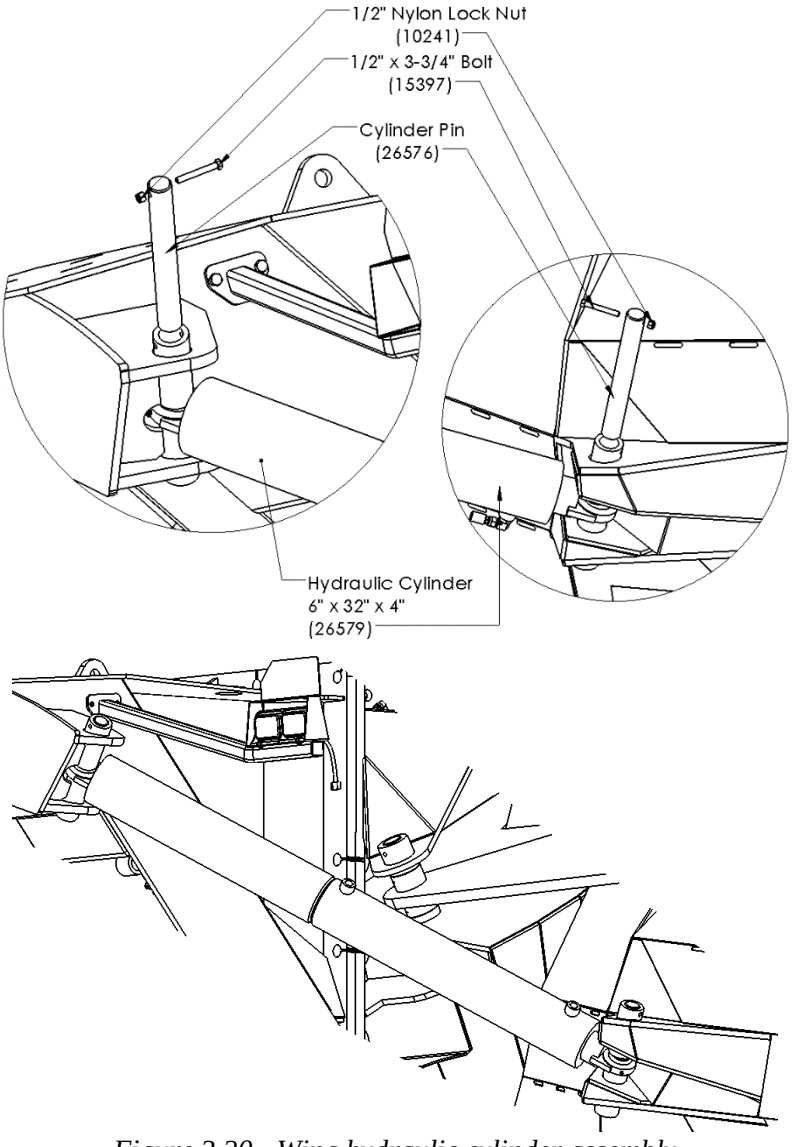

Figure 3.20 - Wing hydraulic cylinder assembly

b) Install two 5" x 24" lift hydraulic cylinders (23310) on both sides, with cylinder pin (22912), cylinder pin (26576), two 1/2" x 4" bolt (15397), two nylon lock nut (10241), and four 2" flat washers (23304). Ports to be facing downwards as shown

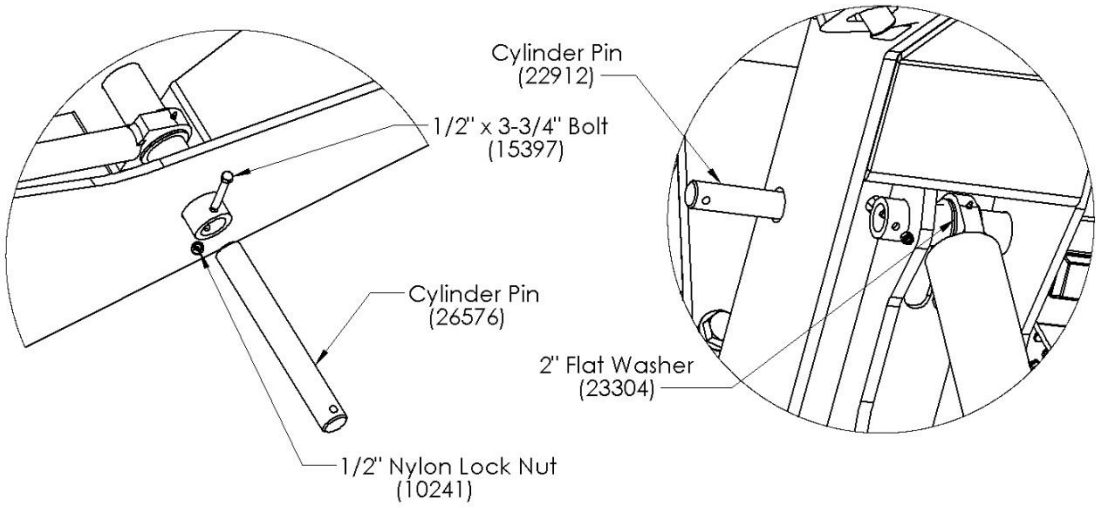

Figure 3.21 -Lift hydraulic cylinder assembly

c) Install two 3" x 12" hydraulic cylinders (26577) on both sides, make sure ports are facing towards each other as shown. Install four cylinder pins (10339), eight 3/16" x 2" cotter pins (11670).

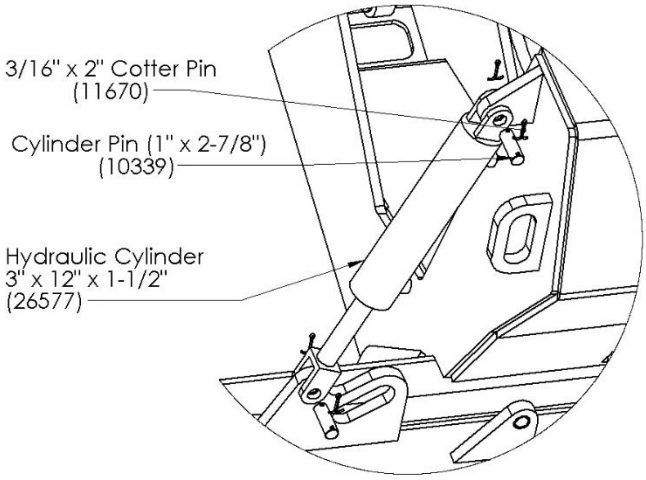

Figure 3.22 - Tilt hydraulic cylinder assembly

d) Install two 4" x 36" hydraulic cylinders (30460) on both sides. Make sure ports are facing towards the front of the machine. Use two cylinder pins (22787), six 3/16" x 2" cotter pins (11670), two cylinder pins (10339), four 1" flat washers. Install flat washer so it spaces both the hydraulic cylinder, 4" x 36" x 2", further apart, on the inside of the clevis of the shaft and cylinder.

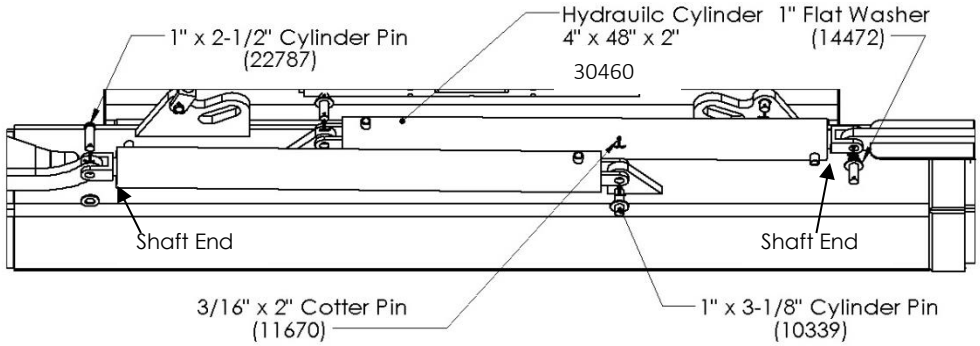

Figure 3.23 - Telescope hydraulic cylinder assembly

e) Install all ten 8MJBH - 8MJ45 hydraulic fittings into hydraulic fitting plate (28565). Hook up hitch hydraulic hoses to 8MJBH - 8MJ45 then install four 3/8" x 1" bolts (13806).

- Install pioneer fittings (17379) to the end of each hose and mark with heat shrink
    a. See **Table 2.1.1 Pulldozer Transformer Hose Marking** & **Table .1.2 – Pulldozer Transformer Hose Marking** for marking of heat shrink per hydraulic hose

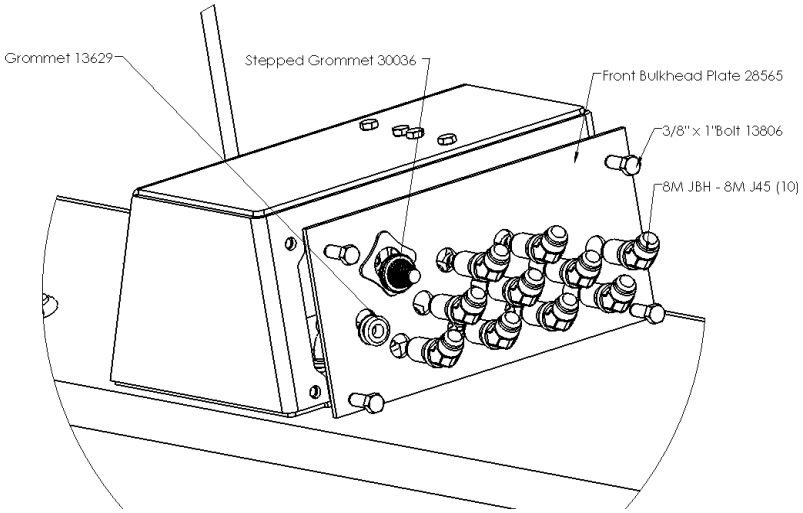

Figure 3.24 -Front bulkhead attachment

f) Install both bulkhead plates A (27241) and B (27240), with four 3/8" x 1" bolts, and two 8MJBHL - 8MJT hydraulic fittings.

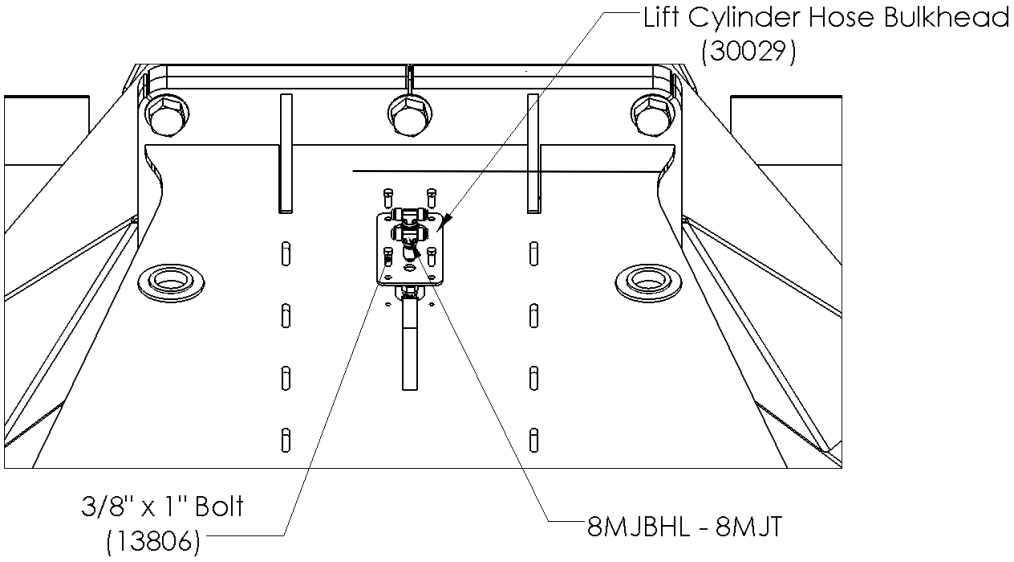

Figure 3.25 - Lift cylinder bulkhead plate

g) Install four 8MJBH - 8MJ hydraulic fittings into bulkhead plate (28648). Attach hitch tube hydraulic hoses to end of 8MJ - 8MJ hydraulic fitting then install four 3/8" x 1" bolts (13806)

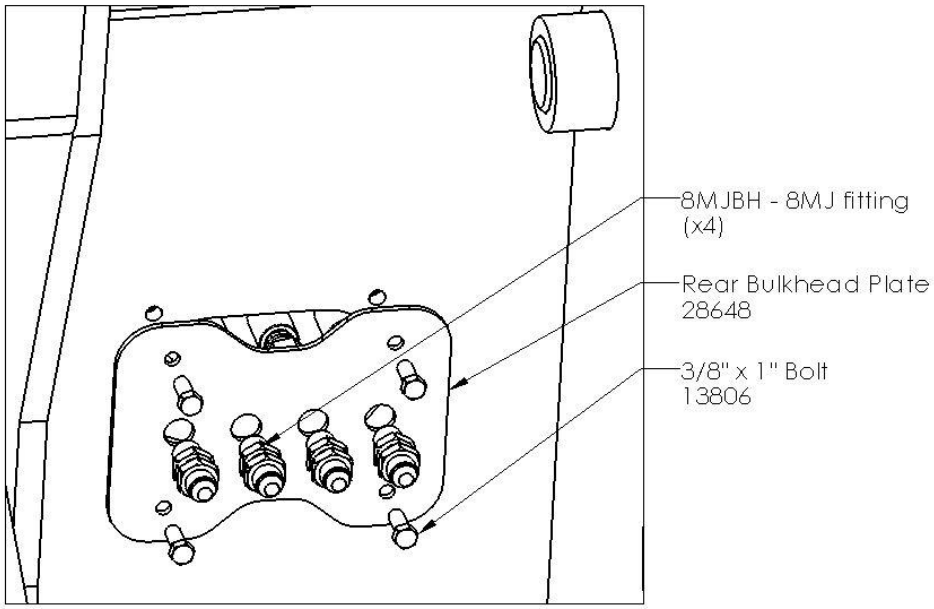

Figure 3.26 - Back bulkhead plate attachment

h) Install four 8MJBHL - 8MJT hydraulic fittings on the main frame weldment.

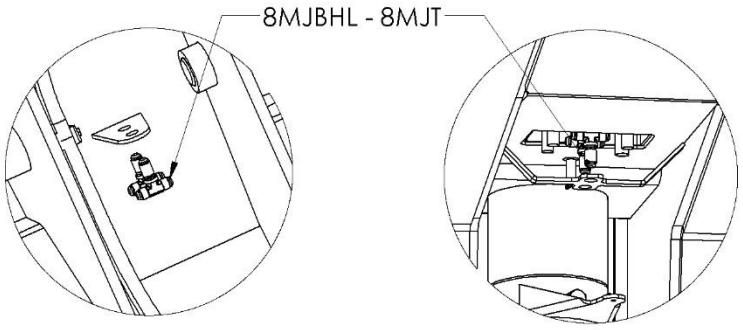

Figure 3.27 - Hydraulic tee fitting attachment

i) Install three hydraulic hose clamps where shown below:

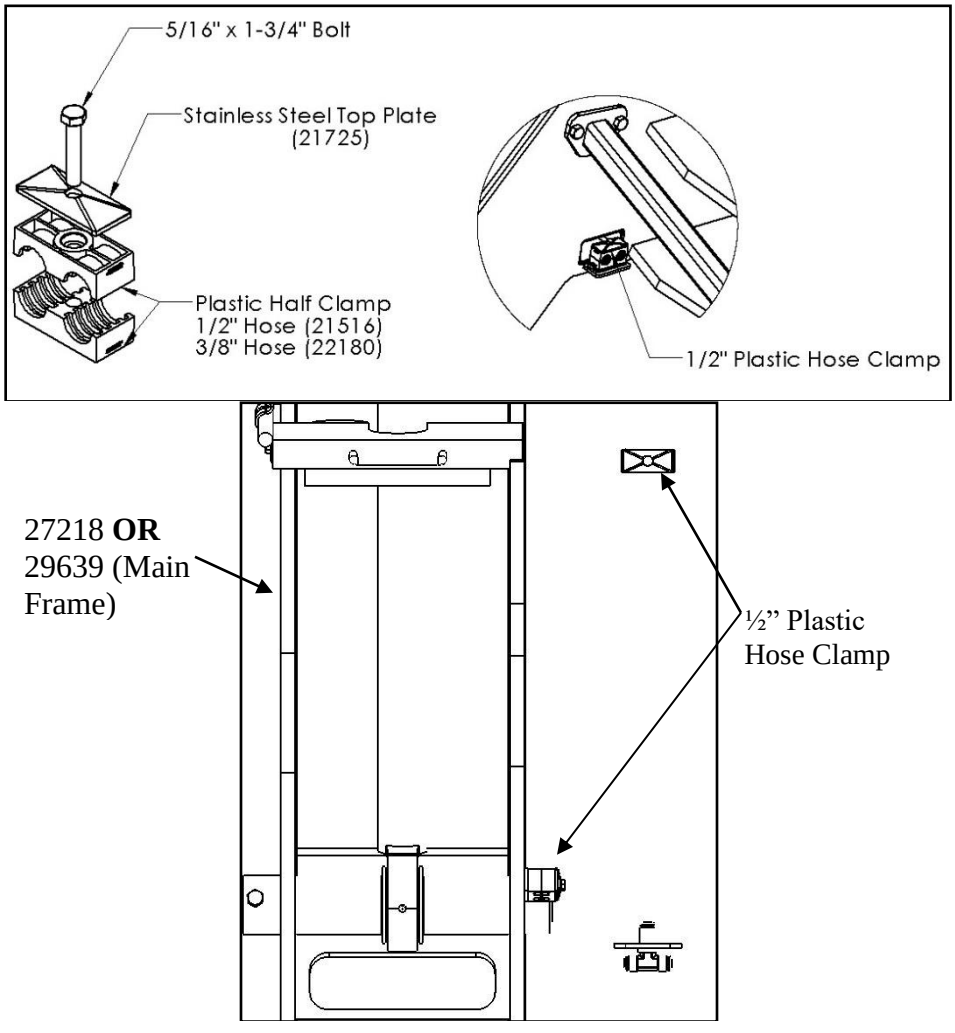

Figure 3.28 - Plastic hose clamp attachment

j) Install diverter valves (11743) using 5/16" x 3 socket head bolts (11783) where applicable.

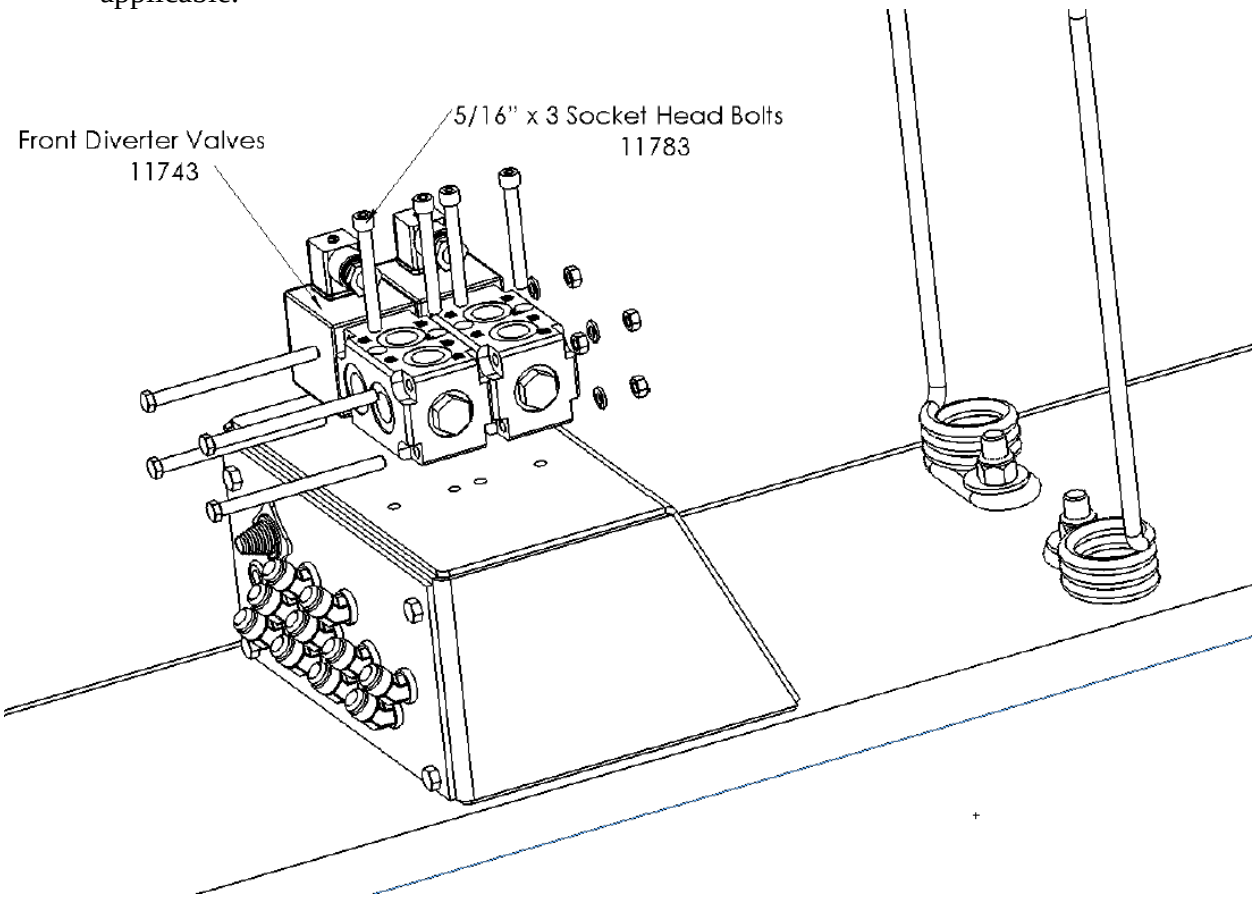

Figure 3.29 – Front Diverter Valves attachment

- Tie any loose hoses together using zip ties or hose straps to complete the rear hose routing.
- When tightening the hose fittings make sure the corresponding cylinder is mid-stroke then make sure hoses are in natural position then tighten.

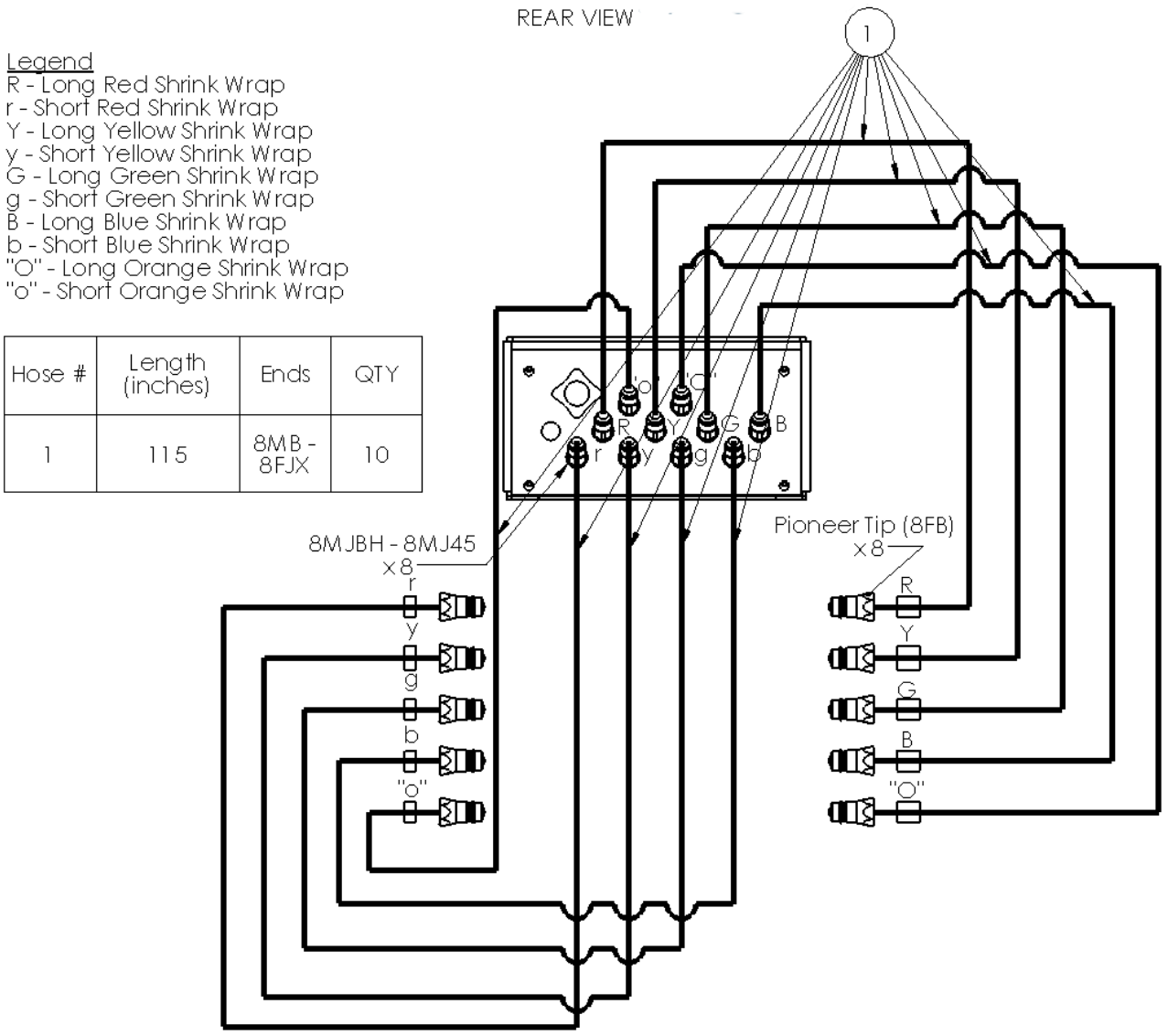

Figure 3.30 – Pulldozer 2470 Front Bulkhead

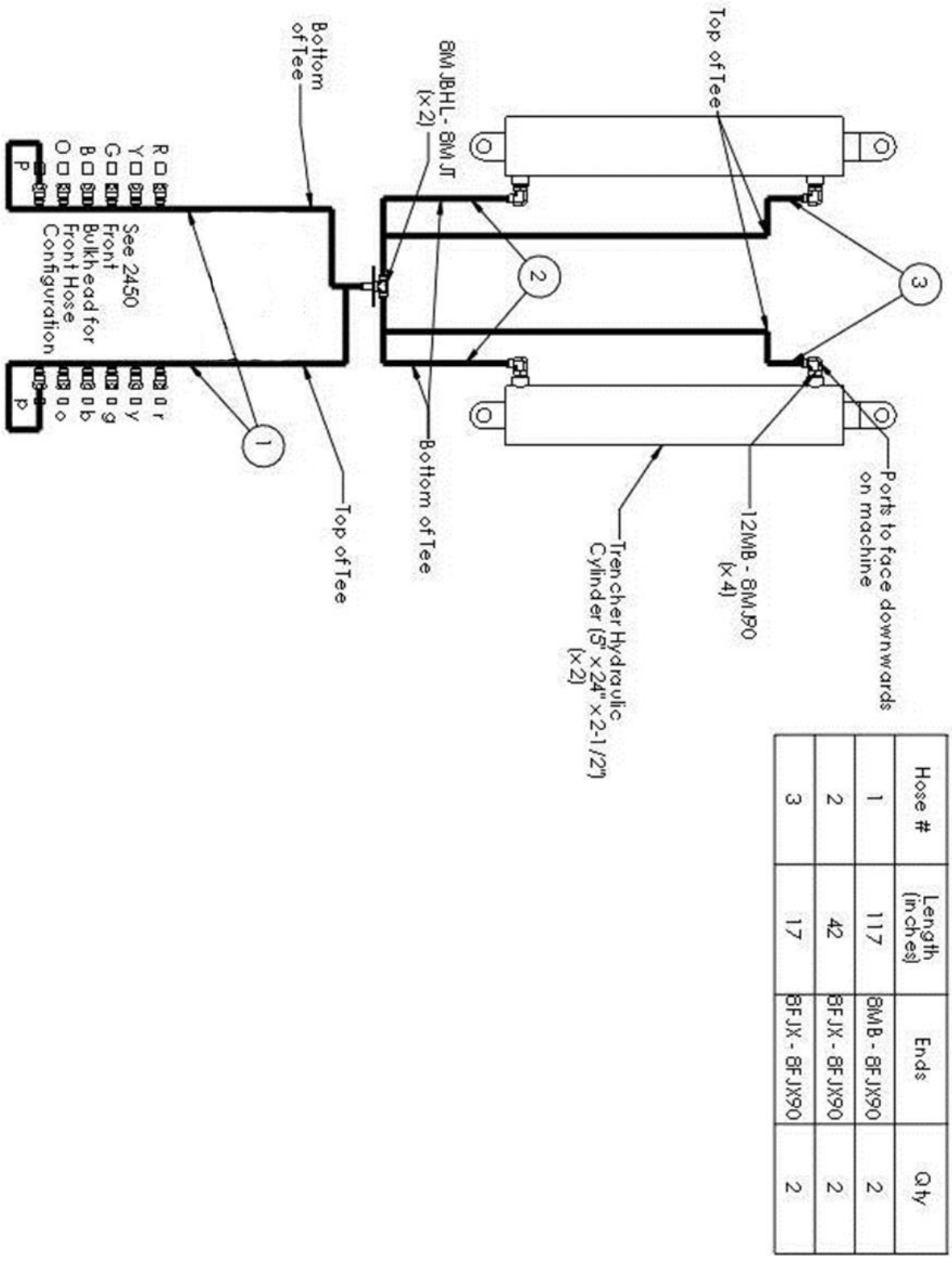

Hose #	Length (inches)	Ends	Qty
1	117	8MB - 8FJX90	2
2	42	8FJX - 8FJX90	2
3	17	8FJX - 8FJX90	2

Figure 3.31 – Pulldozer 2470 XL Front Bulkhead

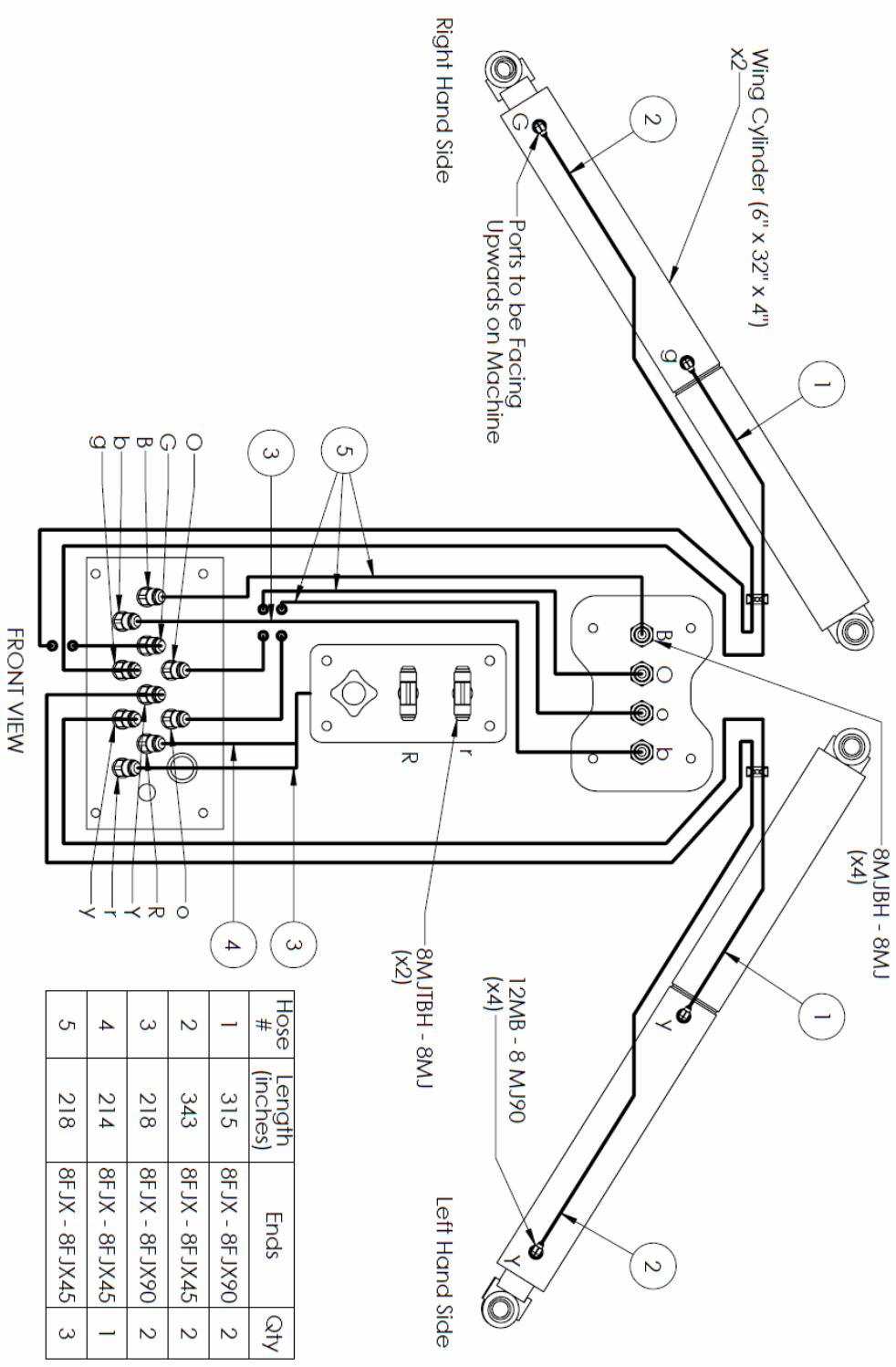

Hose #	Length (inches)	Ends	Qty
1	315	8FJX - 8FJX90	2
2	343	8FJX - 8FJX45	2
3	218	8FJX - 8FJX90	2
4	214	8FJX - 8FJX45	1
5	218	8FJX - 8FJX45	3

Figure 3.32 – Wing Cylinder Routing

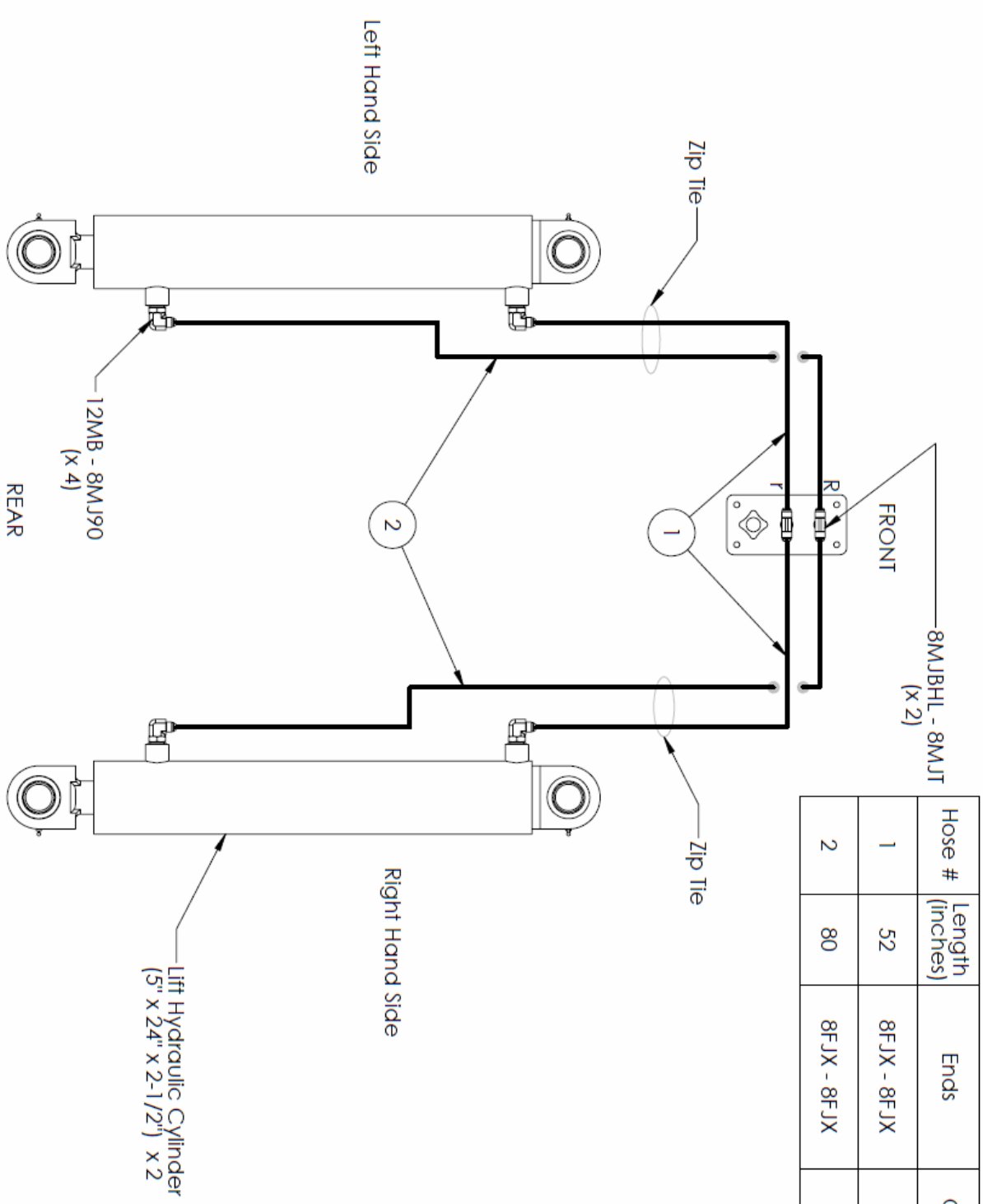

Hose #	Length (inches)	Ends	Qty
1	52	8FJX - 8FJX	2
2	80	8FJX - 8FJX	2

Figure 3.33 – Lift Cylinder Routing

Hose #	Length (inches)	Ends	Qty
1	58	6FJX - 8FJX90	2
2	56	6FJX - 8FJX90	2
3	65	8FJX - 8FJX	2

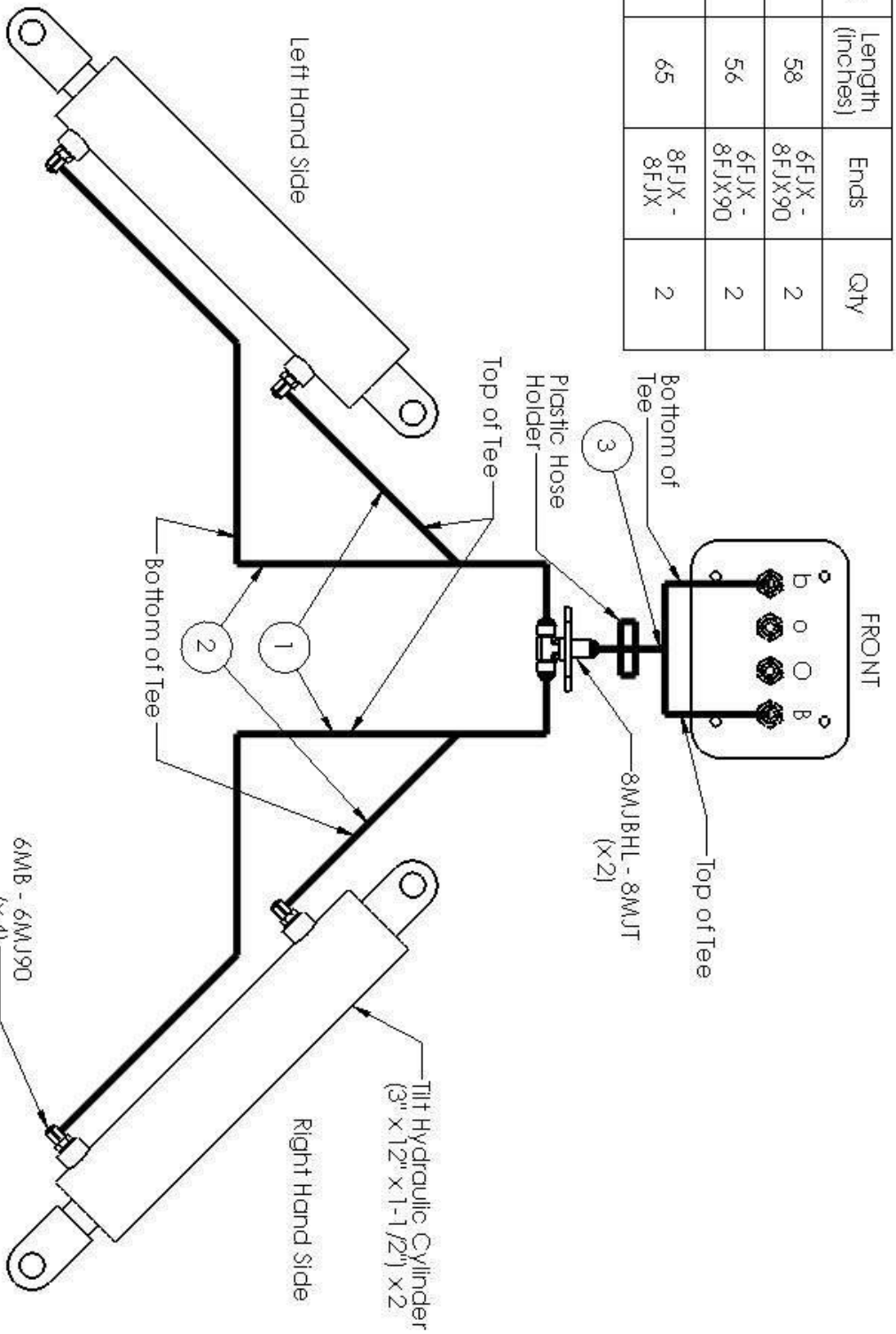

Figure 3.34 – Tilt Cylinder Routing

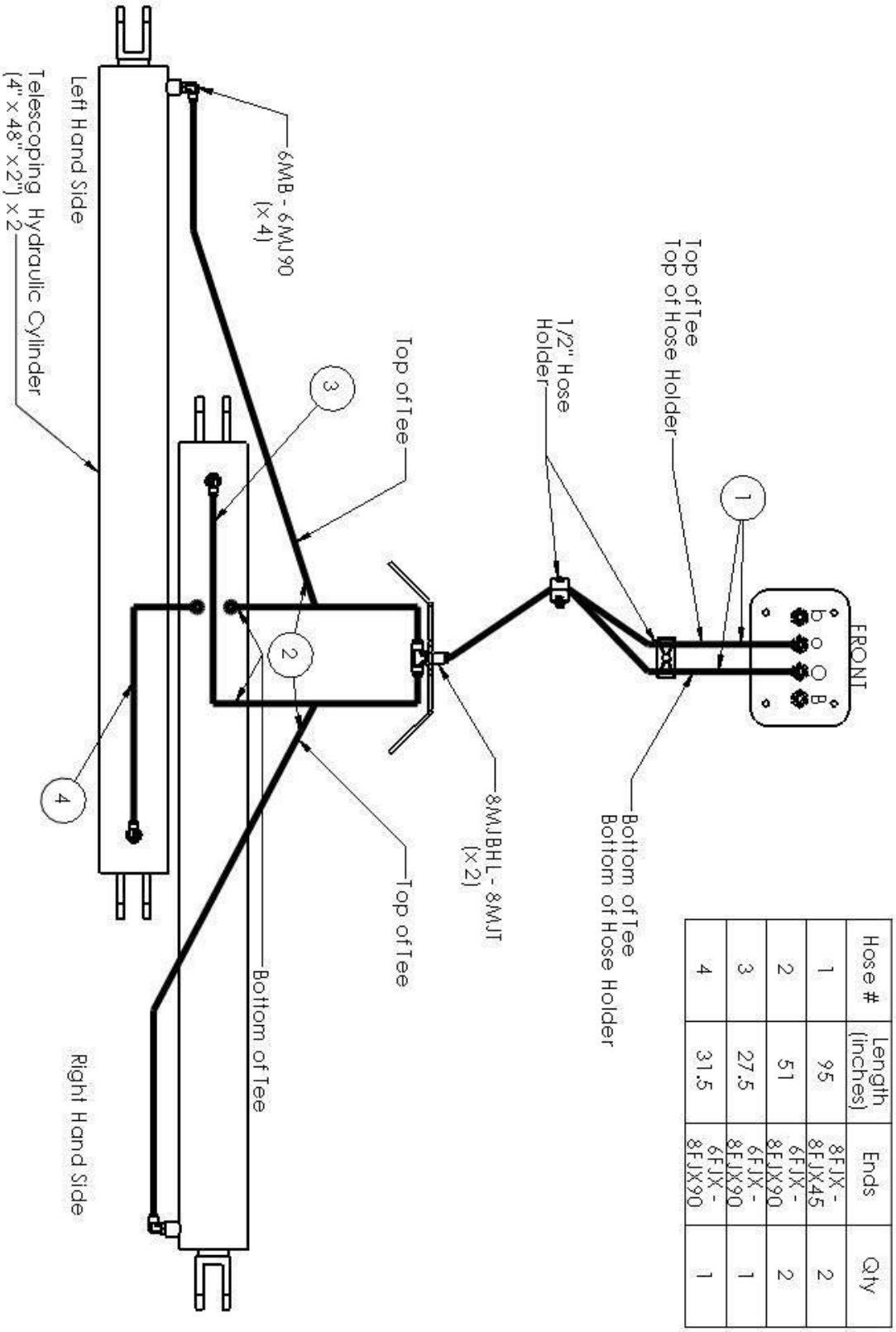

Hose #	Length (inches)	Ends	Qty
1	95	8FJX - 8FJX45	2
2	51	6FJX - 8FJX90	2
3	27.5	6FJX - 8FJX90	1
4	31.5	6FJX - 8FJX90	1

Figure 3.35 – Telescoping Cylinder Routing

Legend
R - Long Red Shrink Wrap
r - Short Red Shrink Wrap
Y - Long Yellow Shrink Wrap
y - Short Yellow Shrink Wrap
G - Long Green Shrink Wrap
g - Short Green Shrink Wrap
B - Long Blue Shrink Wrap
b - Short Blue Shrink Wrap
"O" - Long Orange Shrink Wrap
"o" - Short Orange Shrink Wrap

Hose #	Length (inches)	Ends	QTY
1	90	8MB - 8FJX	8
2	33	8FJX - 8FJX45	1
3	35	8FJX - 8FJX45	1
4	32	8FJX - 8FJX	2

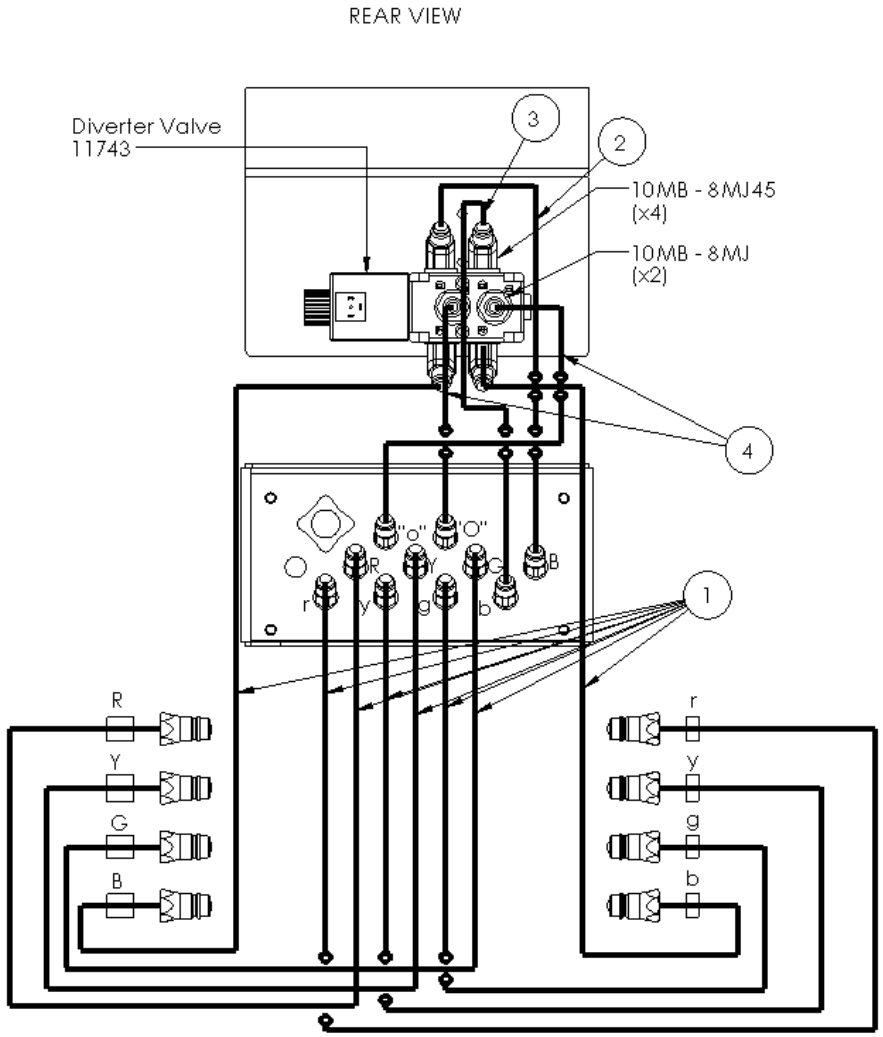

Figure 3.36 – Pulldozer Transformer 2470 4 Remote Kit

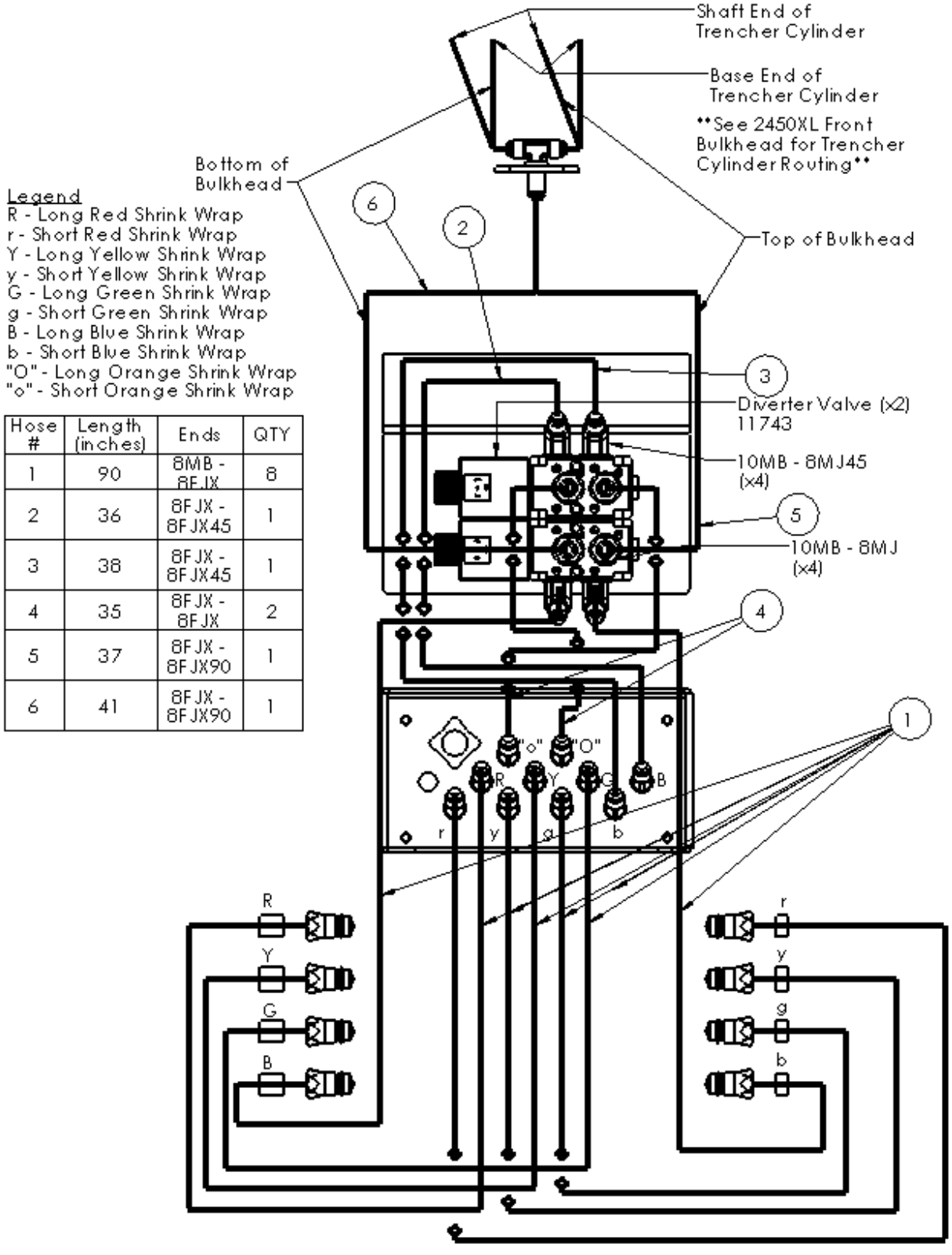

Hose #	Length (inches)	Ends	QTY
1	90	8MB - 8FJX	8
2	36	8FJX - 8FJX45	1
3	38	8FJX - 8FJX45	1
4	35	8FJX - 8FJX	2
5	37	8FJX - 8FJX90	1
6	41	8FJX - 8FJX90	1

Figure 3.37 – Pulldozer Transformer 2470XL 4 Remote Kit

Install hydraulic hose access plate (26717) using four 3/8" x 1" bolts (13806).

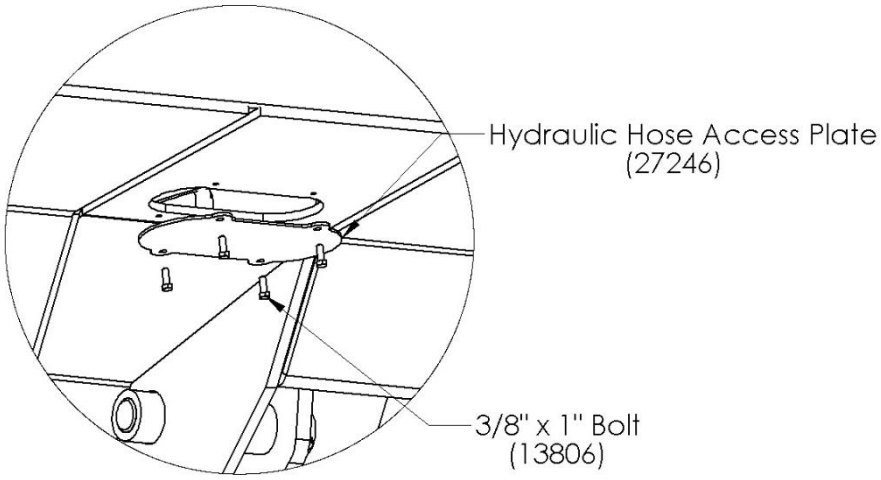

Figure 3.38 – Hydraulic hose access plate attachment

3.4. Electrical Assembly

3.4.1 Serial Number PD1315 & Down

a) Run main electrical cable 28699 (4-wire) through the hitch (see wiring diagram at end of section). It will run alongside the hydraulic lines, through the front bulkhead cover (using a grommet-21428). Leave enough wire at the back for ease of making connections. Both bulkhead covers can then be installed.

b) Connect the 7-pin round trailer plug following figure 3.41.

c) Route the light wishbone harness (28652) through the right light bar (27227) and left light bar (28781) then bolt to middle blade weldment. Use four 5/8" x 2-1/4" bolts (14469) and eight 1/4" nylon lock nuts (11664), left hand dual light (22968), and right hand dual light (22969).

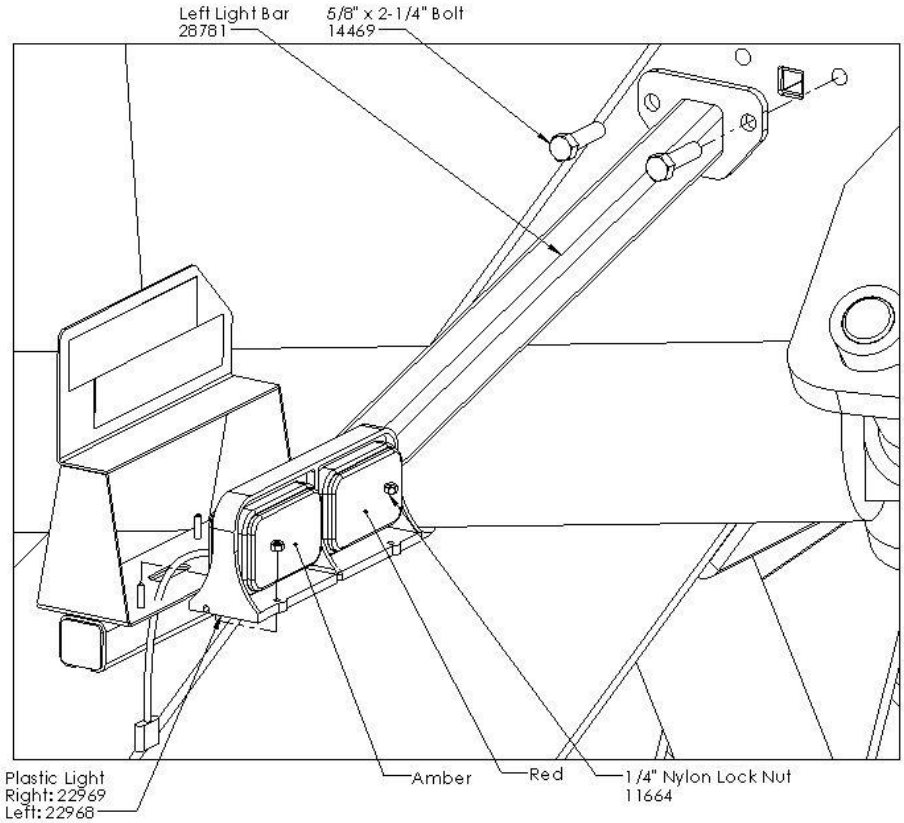

Figure 3.39 – Left light bar attachment

d) Connect main harness (28699) to wishbone harness (28652) as shown.

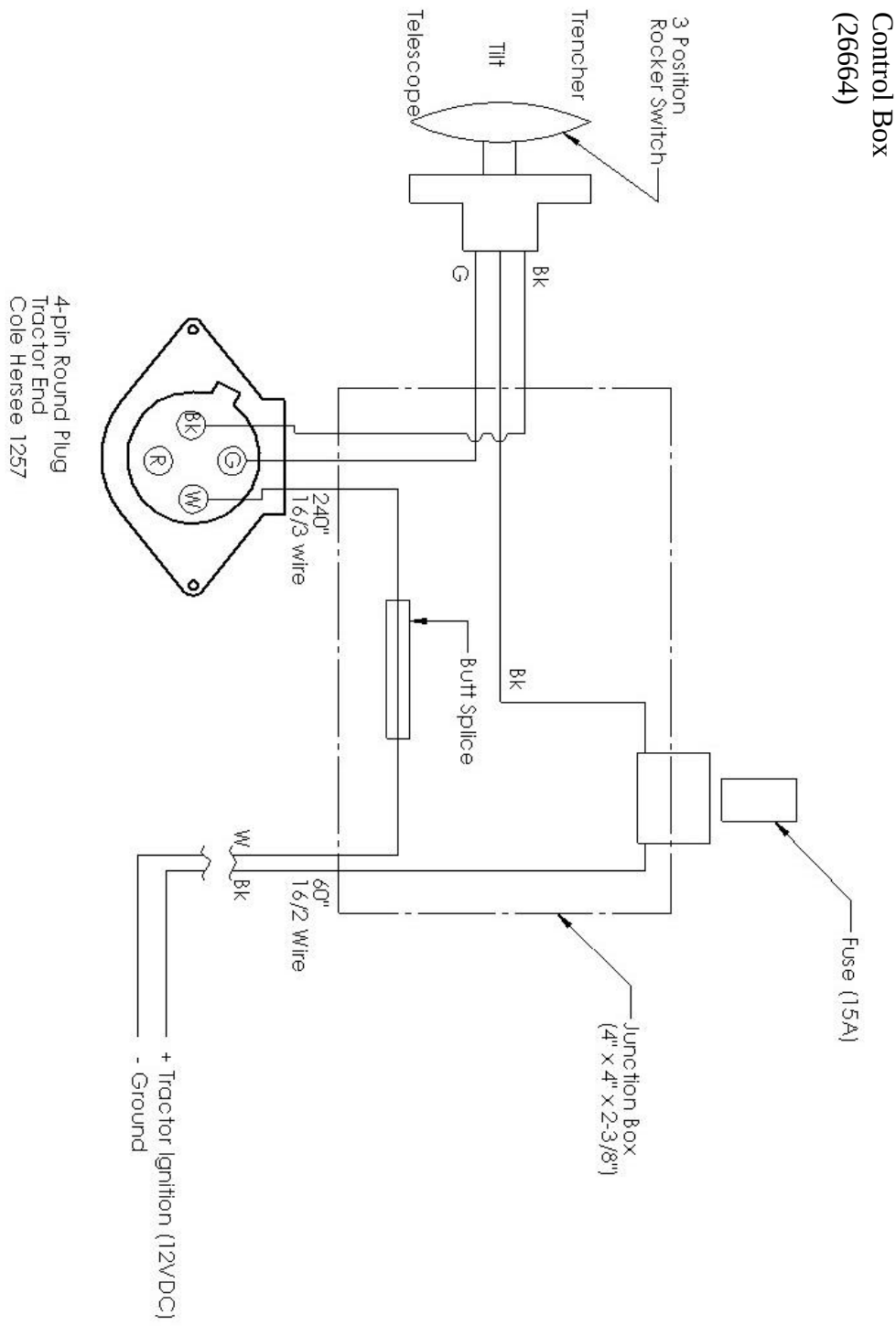

Figure 3.40 – Diverter Control Box Wiring Diagram

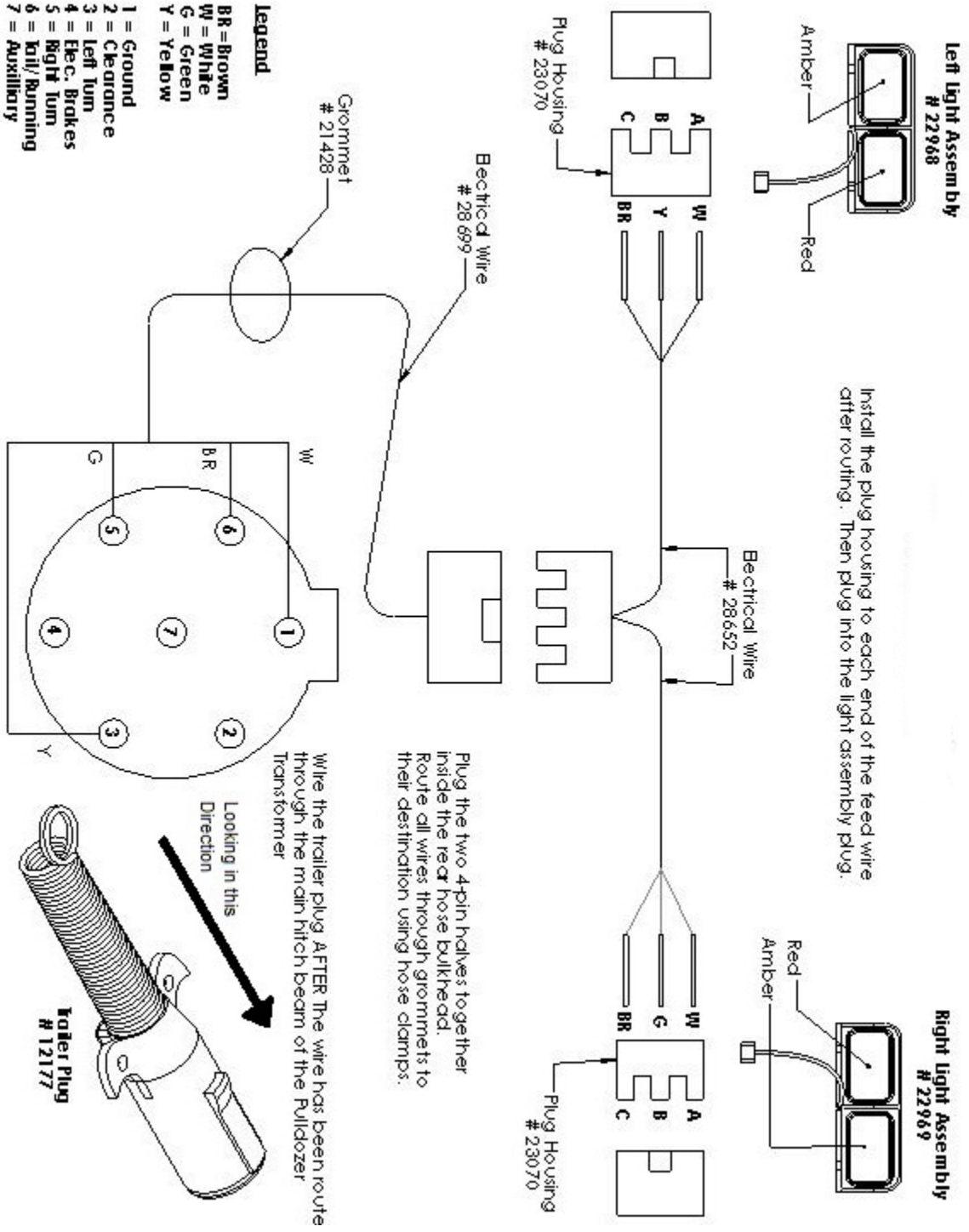

Figure 3.41 – Pulldozer Transformer 2470 Light Wiring Schematic

3.4.2 Serial Number PD1316 & Up

a) Run main electrical cable through the hitch (see wiring diagram at end of section). It will run alongside the hydraulic lines, through the front bulkhead cover (using a grommet-21428). Leave enough wire at the back for ease of making connections. Both bulkhead covers can then be installed.

b) Connect the 7-pin round trailer plug following figure 5.

c) Route the light wishbone harness (232255) through the right light bar (27227) and left light bar (28781) then bolt to middle blade weldment. Use four 5/8" x 2-1/4" bolts (14469) and eight 1/4" nylon lock nuts (11664), left hand dual light (31087), and right hand dual light (31088).

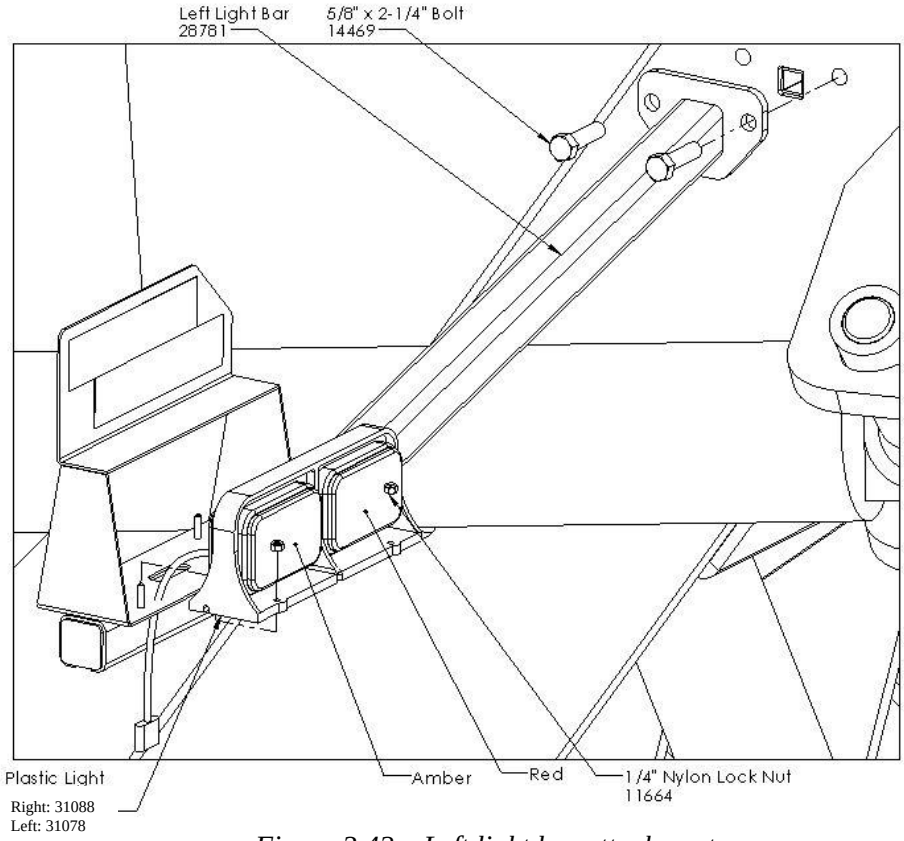

Figure 3.42 – Left light bar attachment

d) Connect main harness (32256) to wishbone harness (32255) as shown in figure 3.43.

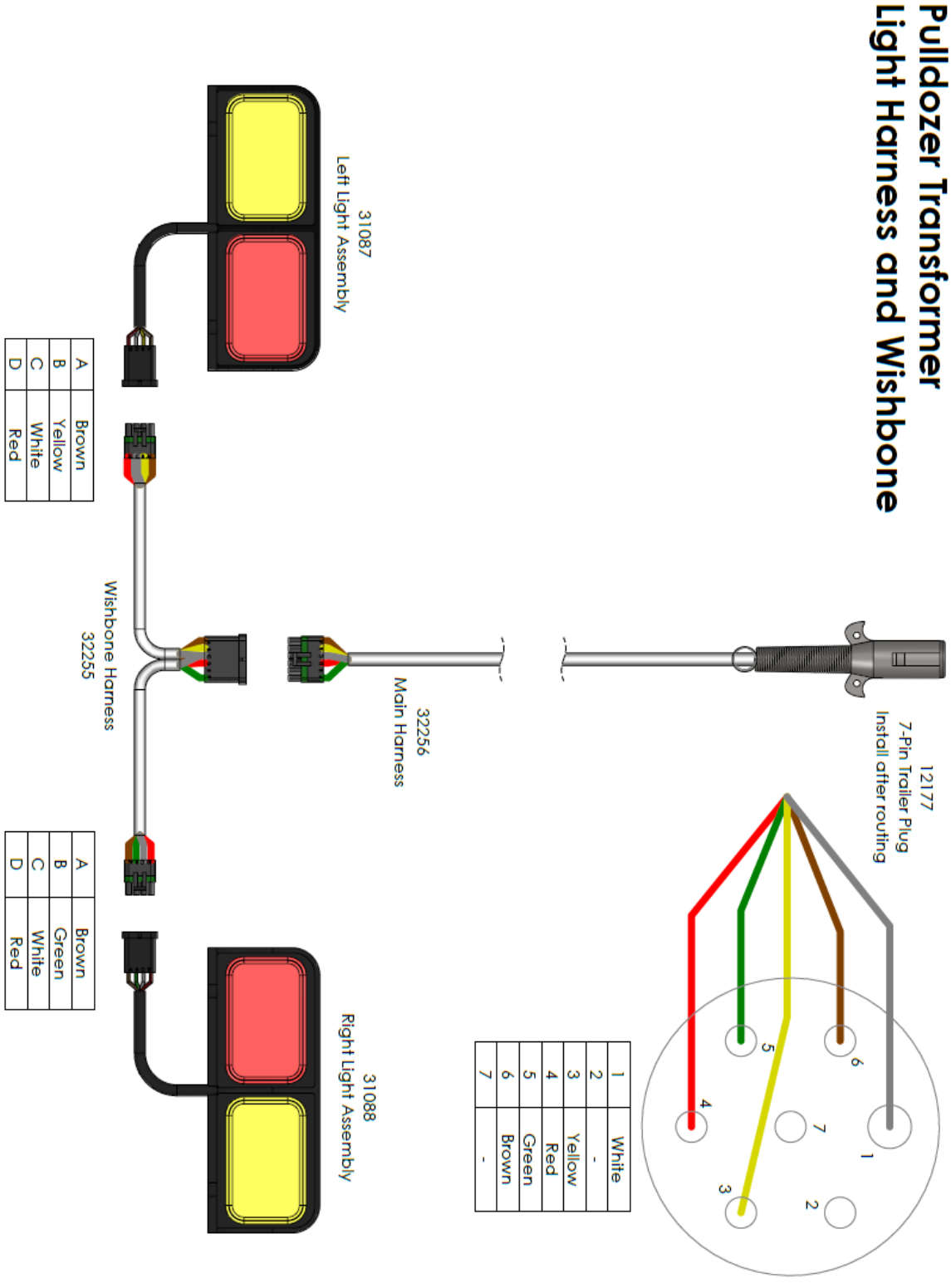

Figure 3.43 – Pulldozer Transformer 2470 Light Wiring Schematic

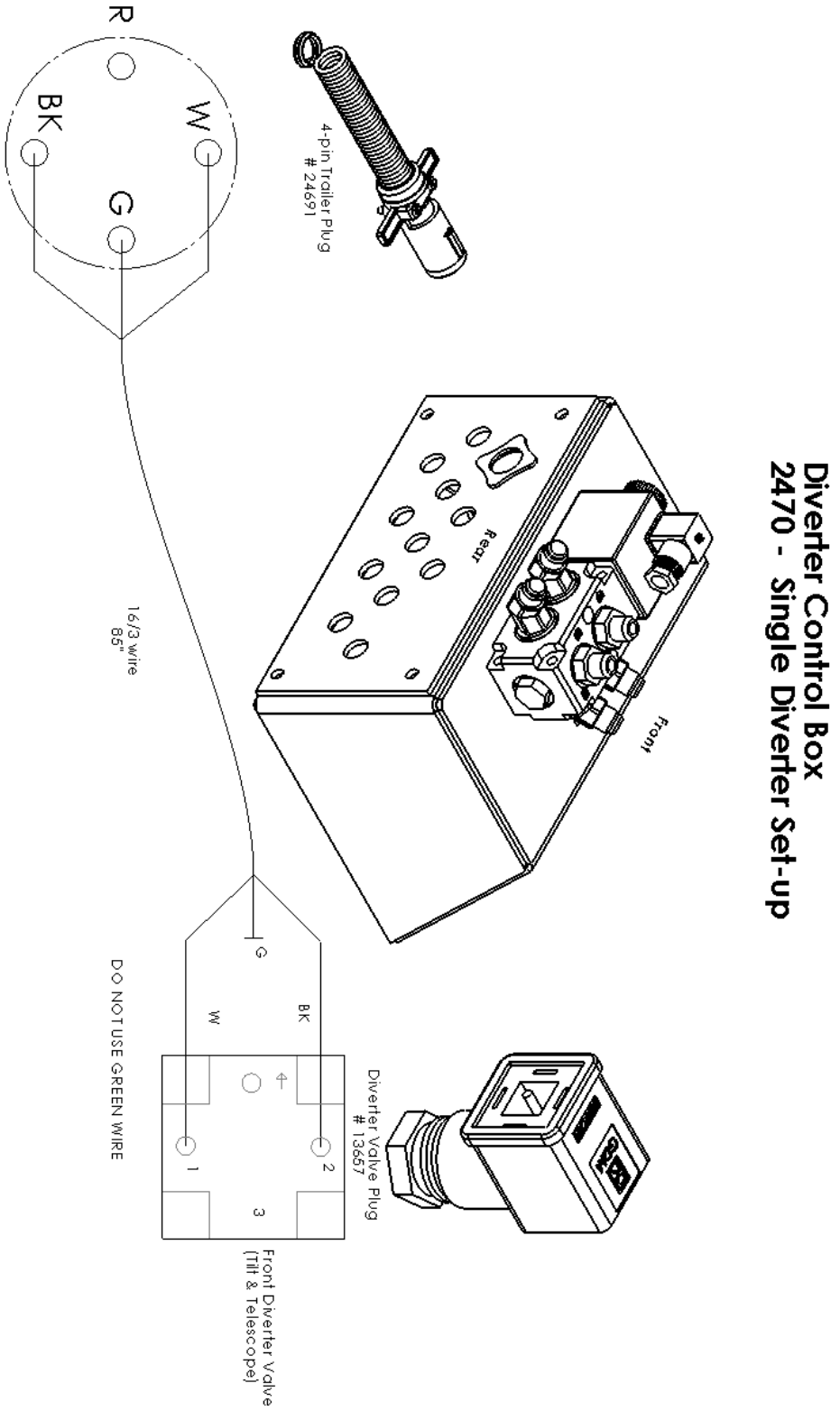

Figure 3.44 – 2470 Diverter Wiring Diagram (4 Remote Kit)

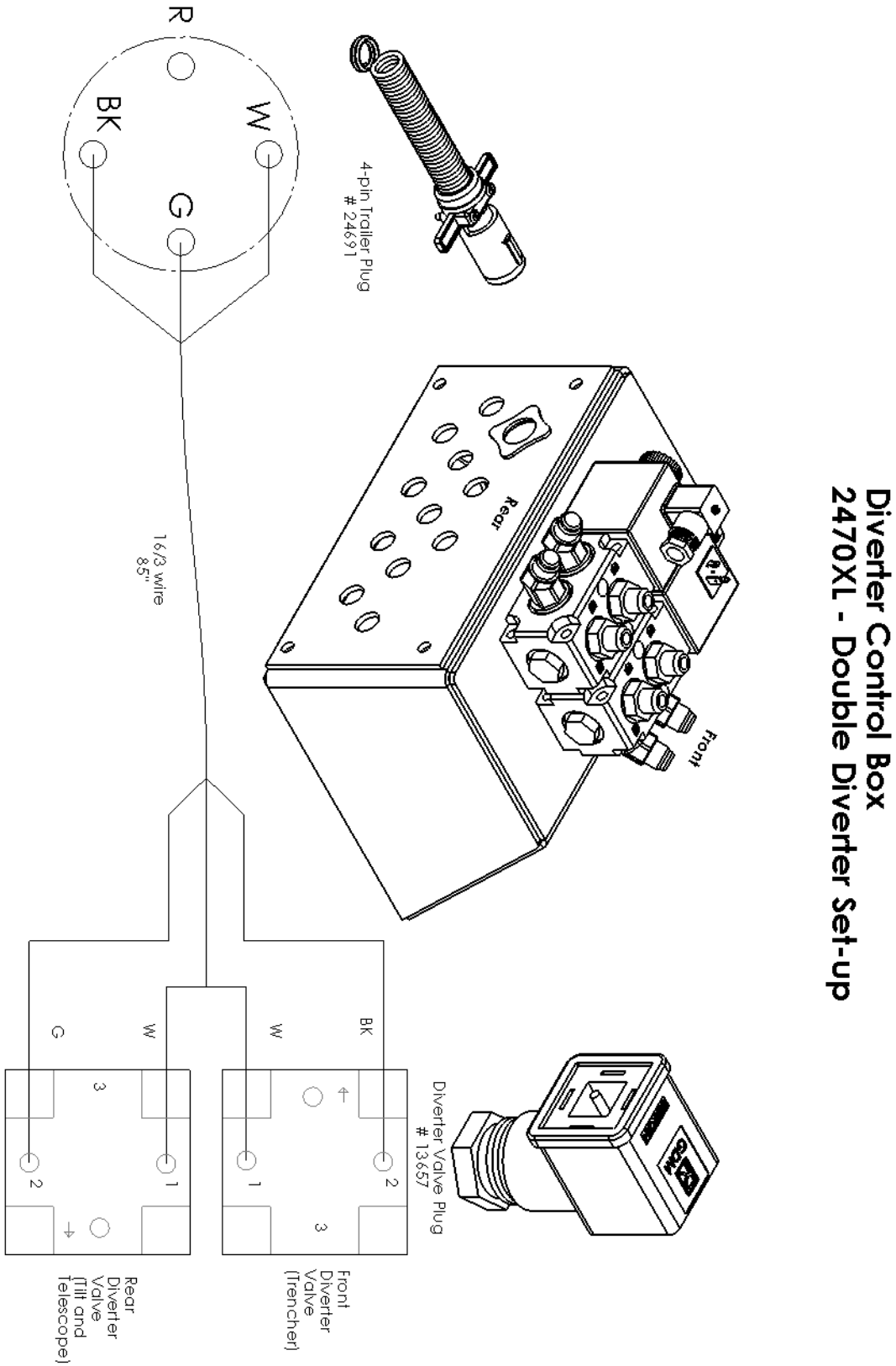

Figure 3.45 – 2470XL Diverter Wiring Diagram (4 Remote Kit)

3.5. Parts Assembly

3.5.1 Scraper Blades

After hooking up the Pulldozer Transformer to the tractor. Lift the blade off the ground and lock it in place. Then attach the scraper blades (20430 x3) to middle blade then (20428 x2) to the wings, using the scraper blade bolts (20448 x57) and 3/4" nuts (20606 x57). Attach the 6' sections to the center first, then the 4' sections to the wings. If equipped with serrated blades use (26572 x2) on wings and (26573 x3) on middle section.

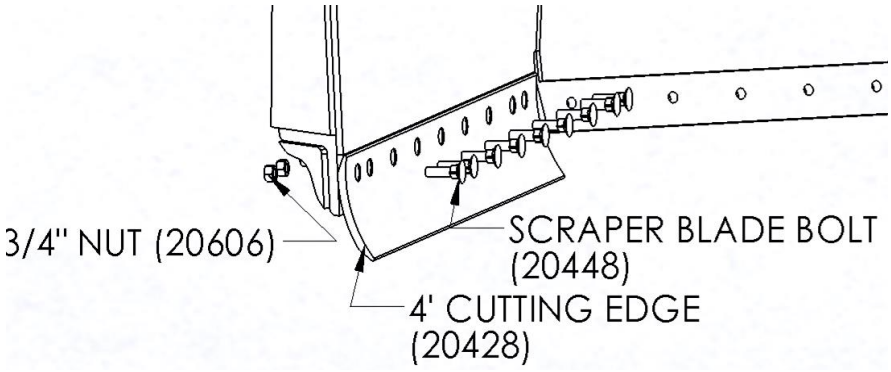

Figure 3.46 – 4 Foot scraper blade attachment

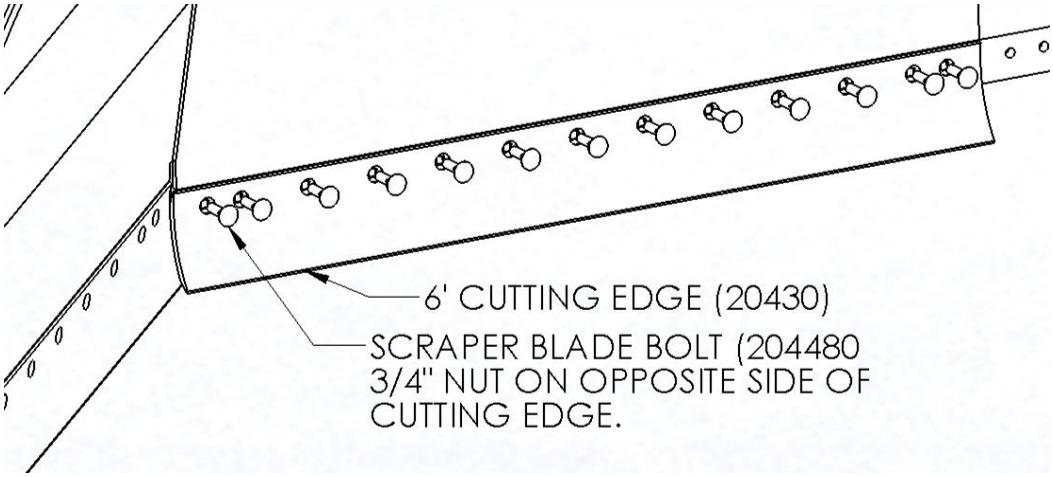

Figure 3.47 – 6-Foot scraper blade attachment

3.5.2 Operator Manual & Serial Number

Install the manual holder box (22409) to the back of the blade using 1/4" x 3/4" bolts (11809), flat washers (11666) and serrated flange nuts (11812).

Install the serial number plate above the manual holder using 1/8" pop rivets.

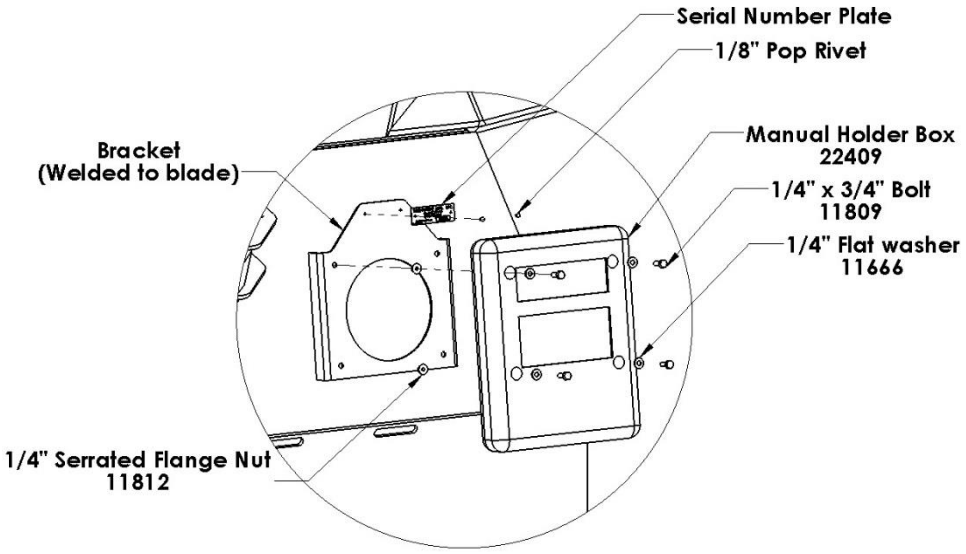

Figure 3.48 – Manual Box

3.5.3 Angle Indicator

- Center and install decal (26649) onto indicator bracket (272012)
- Insert brass bushing (10005) into indicator needle (272031)
- Install arm onto bracket using brass bushing, 3/4" x 4" bolt (15578) and 3/4" lock nut (10007). DO NOT OVERTIGHTEN - Arm must swivel freely
- Install one end of the PTO cable (23307) through the slotted hole in the bracket and insert the ball joint (22955) into the bracket and tighten in place using two 5/8" nuts (10275)
- Install the clevis end of the cable (22957) to the arm using the supplied pin and cotter pin. NOTE: There are two different holes, depending on which size machine you have.

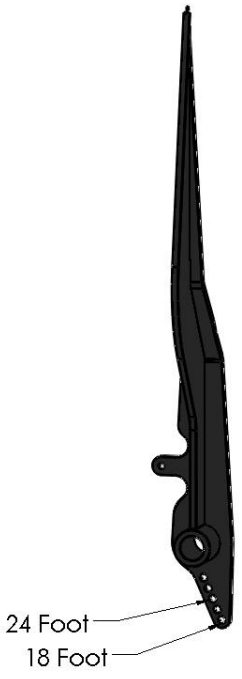

- Install one end of the spring (11787) into the needle, then through the clip on the bracket
- Leave the clevis jam nut loose until the final adjustment is complete

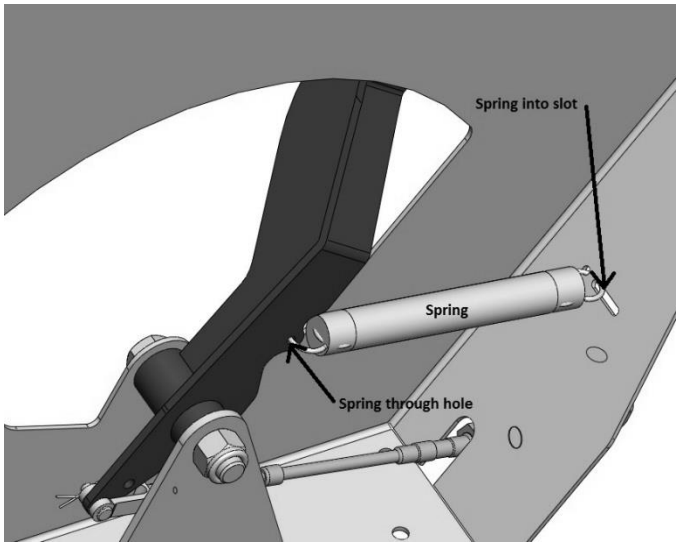

Figure 3.49 – Angle indicator attachment

Angle Indicator cont.

Loosely route the cable alongside the main frame towards the back of the machine. Install the eyeball and clevis of the cable as per the top side.

2470 20ft Cable 23307

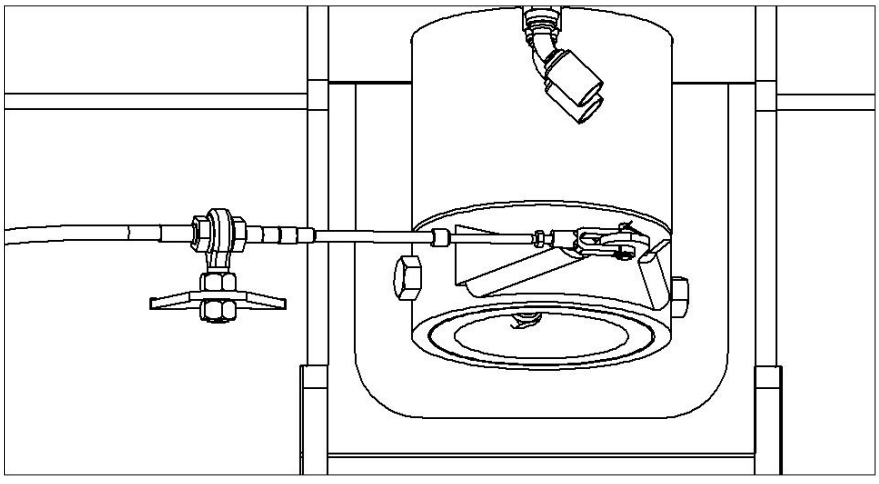

Figure 3.50 – Rear angle indicator attachment

Along the side of the main frame, install a clamp to tie the cable down. Use a three 3/8" x 1" bolts (13806) and three cable clamps (13629) as shown.

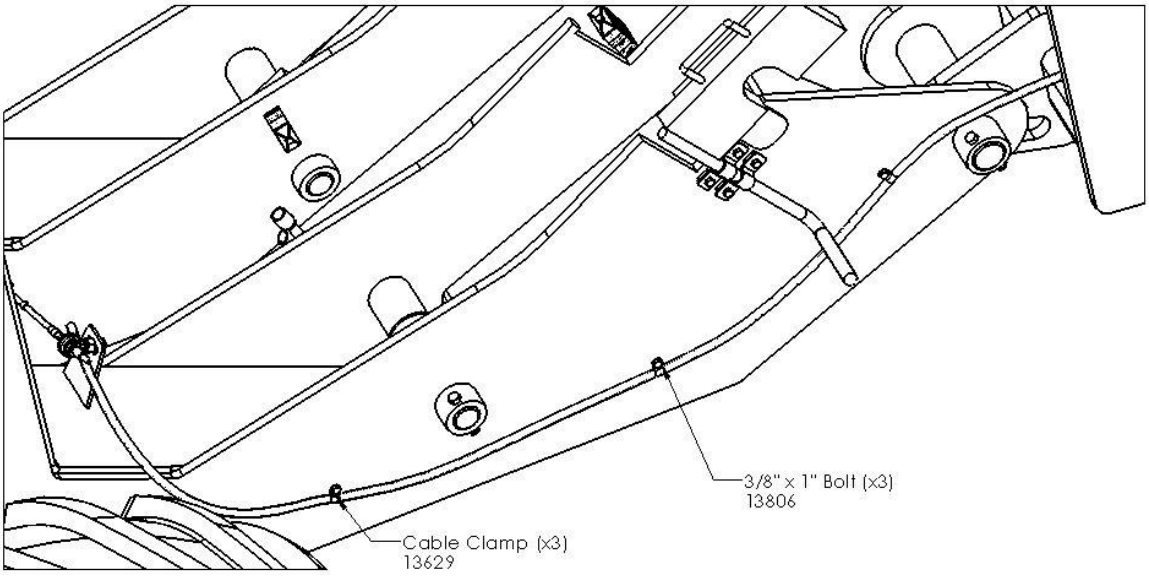

Figure 3.51 – Angle cable assembly

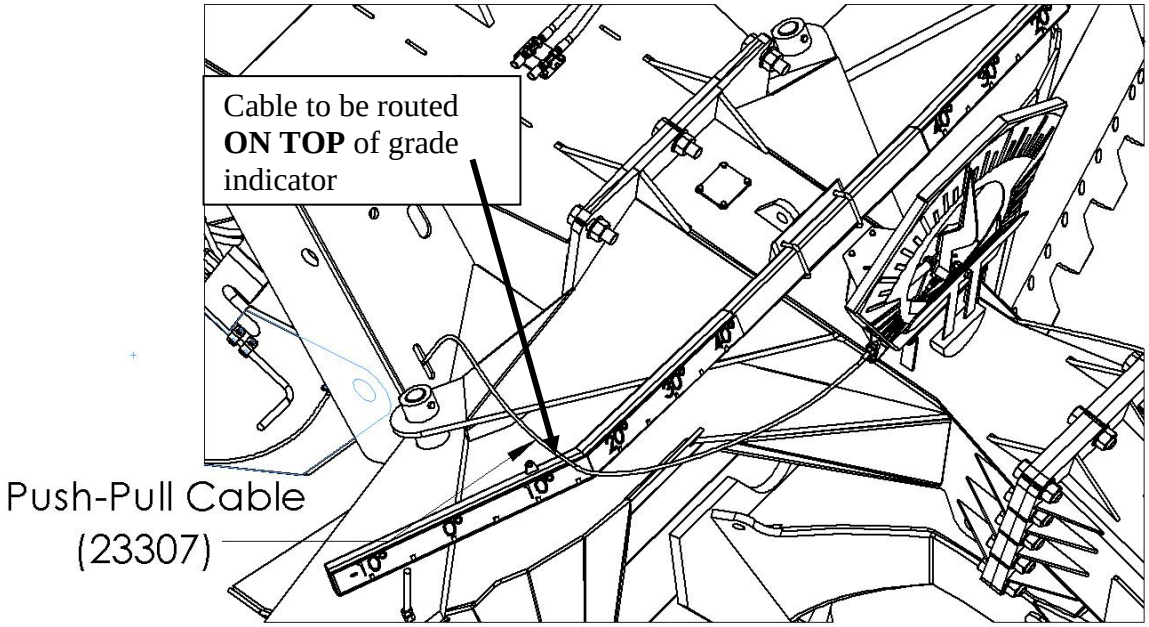

Figure 3.52 – Angle cable assembly

If the indicator needle does not read "center" when the blade is perfectly level, it can be adjusted by loosening the jam nut on one of the clevises, removing the pin and threading the clevis either in or out. Tighten the jam nuts when finished adjustment.

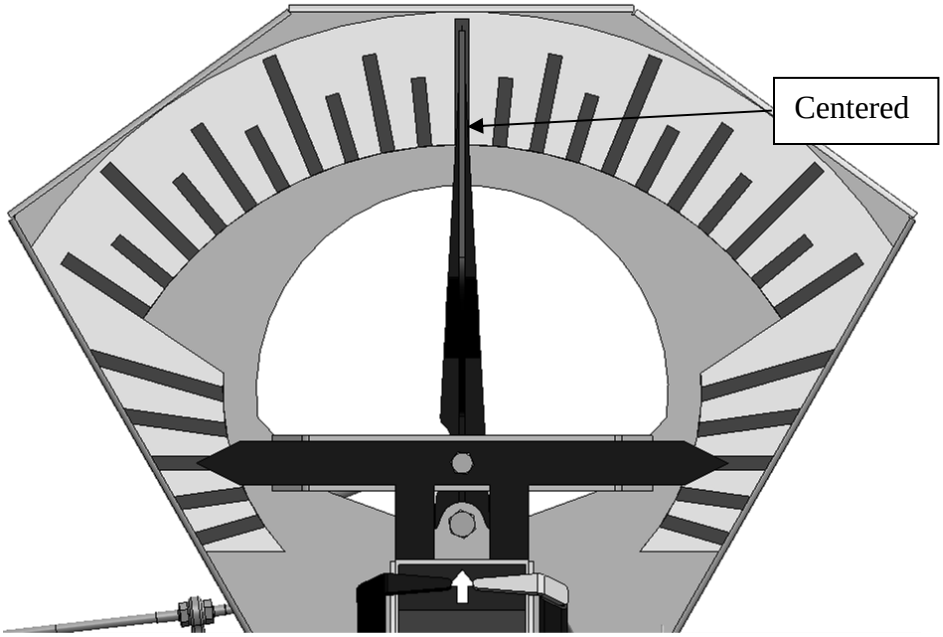

Figure 3.53 – Angle arm adjustment

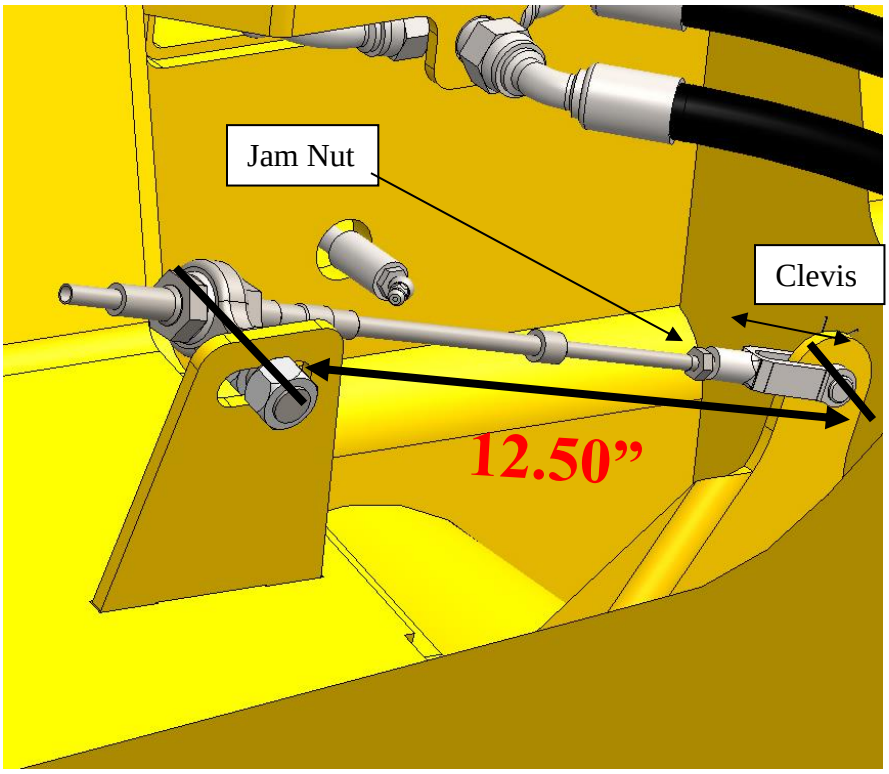

Figure 3.54 – Clevis adjustment

3.5.4 Height Indicator

Loosely route the cable on the left-hand side of the middle blade, through the access hole.

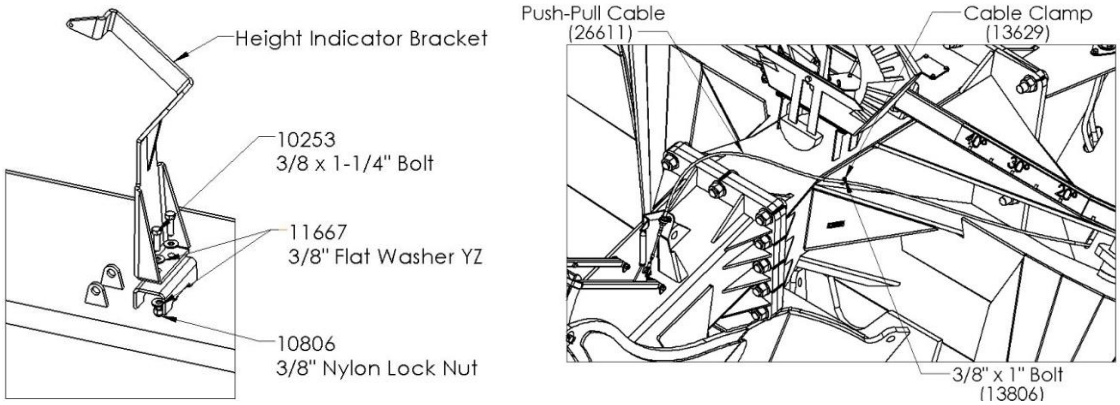

Figure 3.55 – Height cable assembly

Along the left side of the middle blade, install a clamp to tie the cable down. Use a 3/8" x 1" bolts (13806) and a cable clamps (13629) as shown.

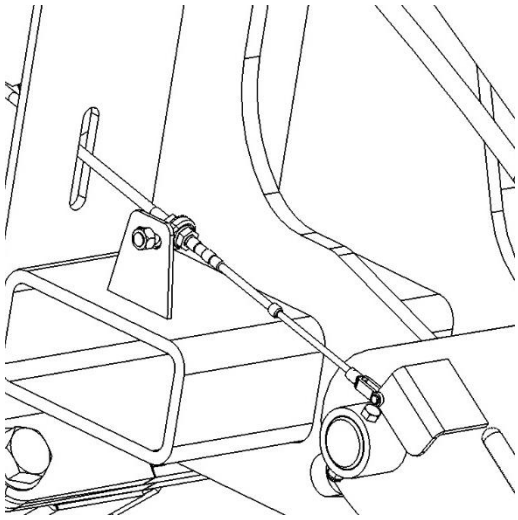

Figure 3.56 – Height cable assembly

When the lift cylinders are fully stroked the height indicator arm should be at the top of decal as shown below, if it is not adjusting by loosening the jam nut on one of the clevises, and threading the clevis either in or out. Tighten the jam nuts when finished adjustment.

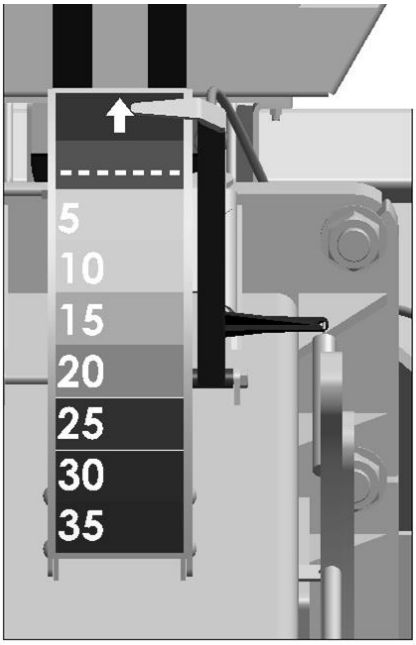

Figure 3.57 - Height indicator adjustment

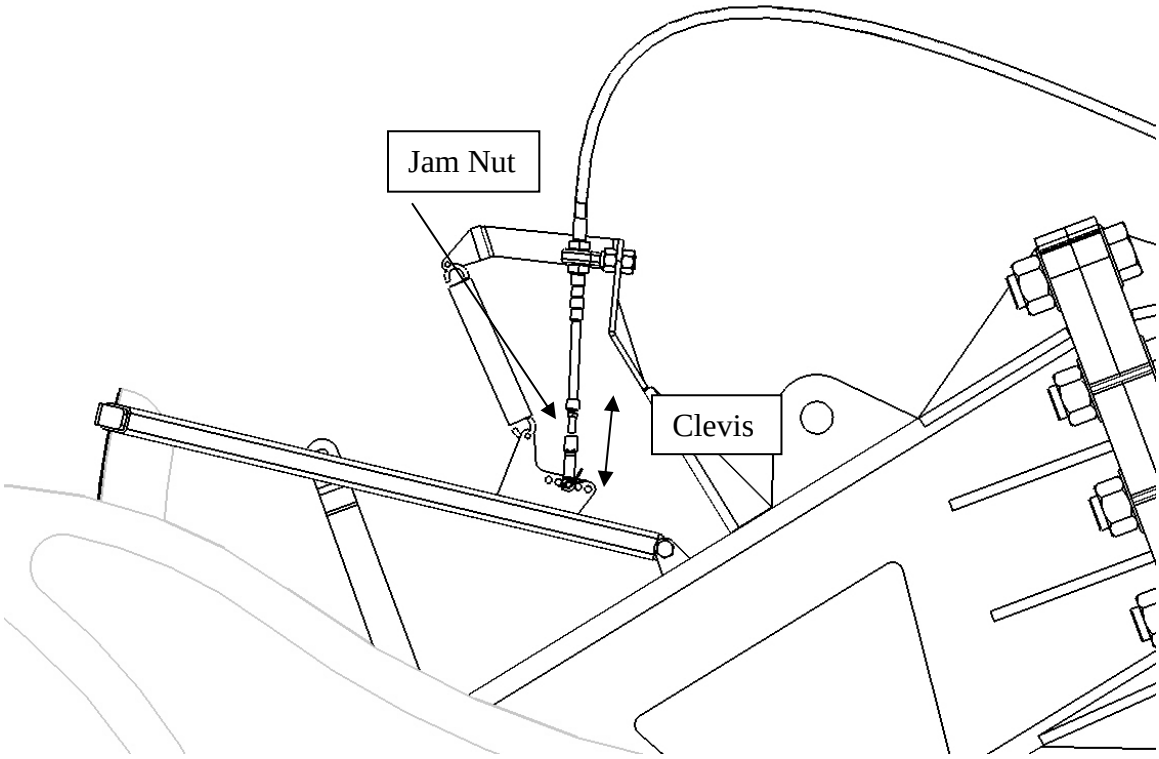

Figure 3.58 – Height indicator adjustment

3.5.5 Grease Tube

The Pulldozer Transformer is equipped with grease hoses to make greasing more easier and user friendly. They are located near the machines lift pivot point shown below:

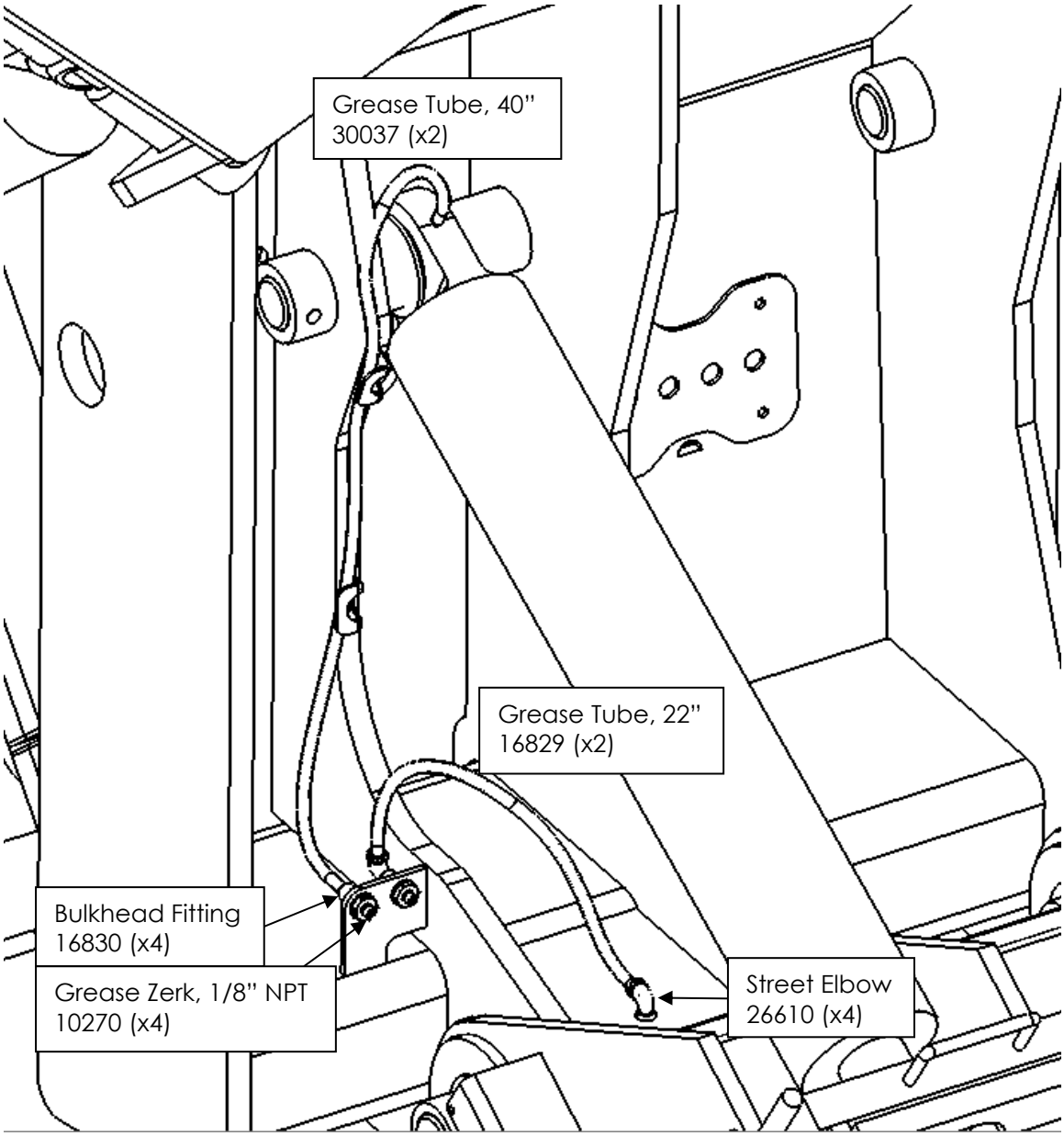

Figure 3.59 – Grease Tube Installation

3.6. Trencher Option

NOTE: For machines with the optional trencher, the hitch section is replaced with a special hitch. All other steps remain the same.

All following steps can be done at any time after the hitch is installed

a) Place the trencher arm (23336) underneath of the hitch, then lift it up into place and insert the pin (22099). Lock the pin in place using two 3/4" x 5" bolts (10803) and Stover lock nuts (11823). Lastly, install two 1/4" self-tapping grease zerks (16364) into the holes in the pivot pipe. Fill with grease until pipe is full.

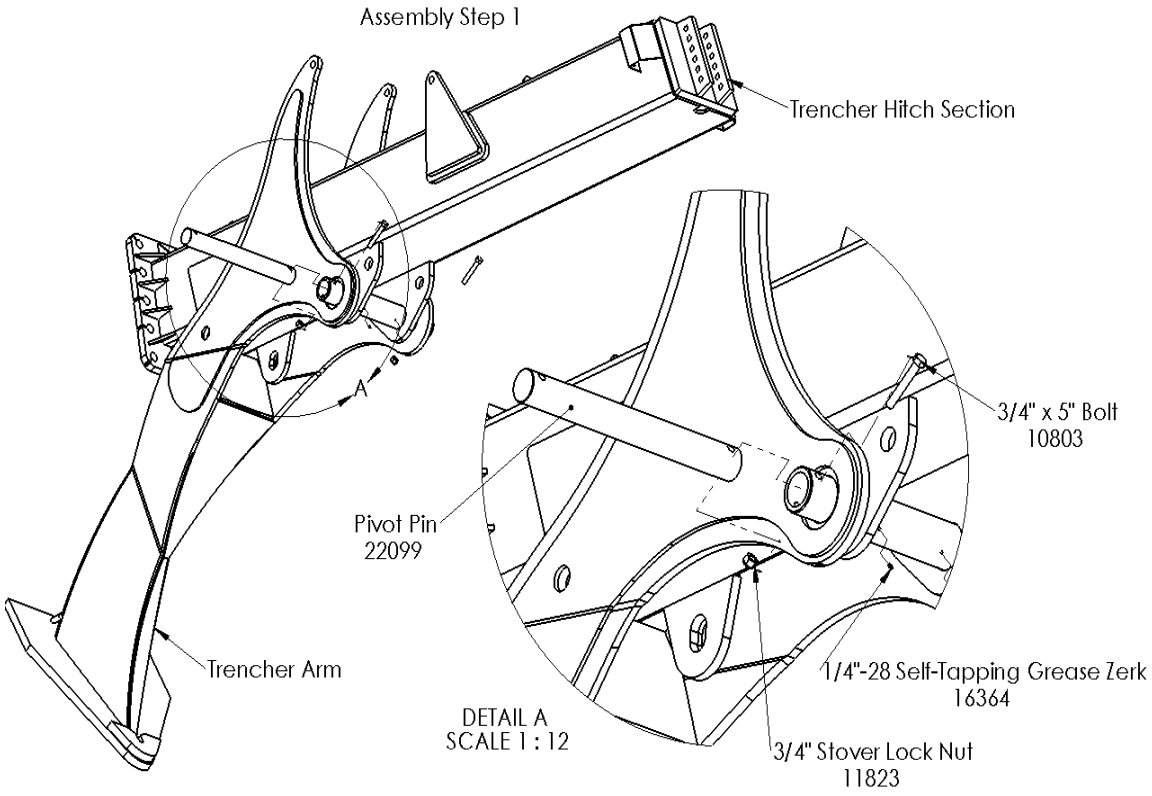

Figure 3.60 – Trencher Installation

b) Place the indicator sticker (26648) onto the depth indicator bracket (27200) with the arrow pointing up. Then install the bracket to the tabs on the top of the hitch using four 3/8" x 1" carriage bolts (15718) and serrated flange nuts (10271).

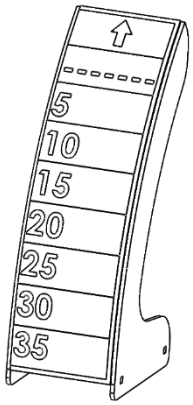

c) Install the depth indicator arm (22137) to the tabs on the top of the hitch using a 1/2" x 3-1/4" (11782) bolt and 1/2" nylon lock nut (10241). The arm should pivot freely.

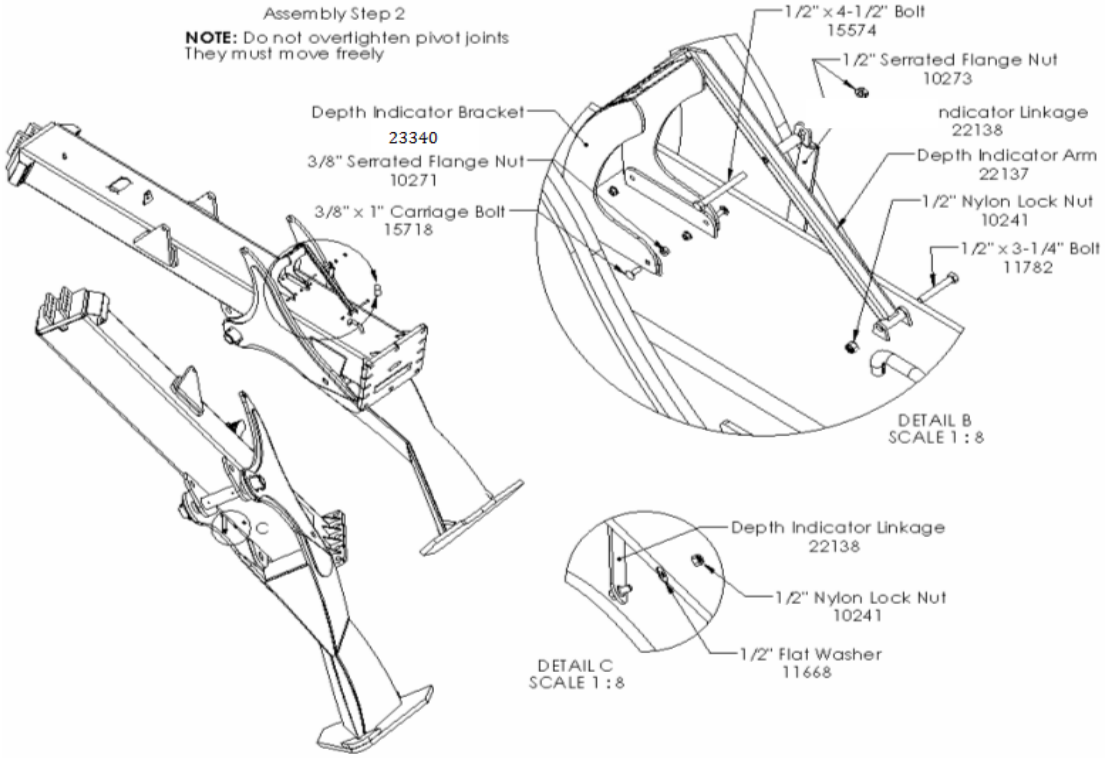

Figure 3.61 – Depth indicator assembly

d) Install the depth indicator linkage (23341) to the welded-on bolt on the ditcher (bushing end) using a 1/2" flat washer (11668) and nylon lock nut (10241). Install the other (slotted) end to the indicator arm using a 1/2" x 4-1/2" bolt (15574) and two serrated flange nuts (10273) to clamp the linkage. Make sure that the arm can still pivot up and down freely. The position within the slot will be set later.

e) Install 5" x 24" hydraulic cylinders (20431) with the ram on the ditcher side and the ports down. Secure at both ends with a 1-1/4" cylinder pin (20688) and two 3/16" cotter pins (11670).

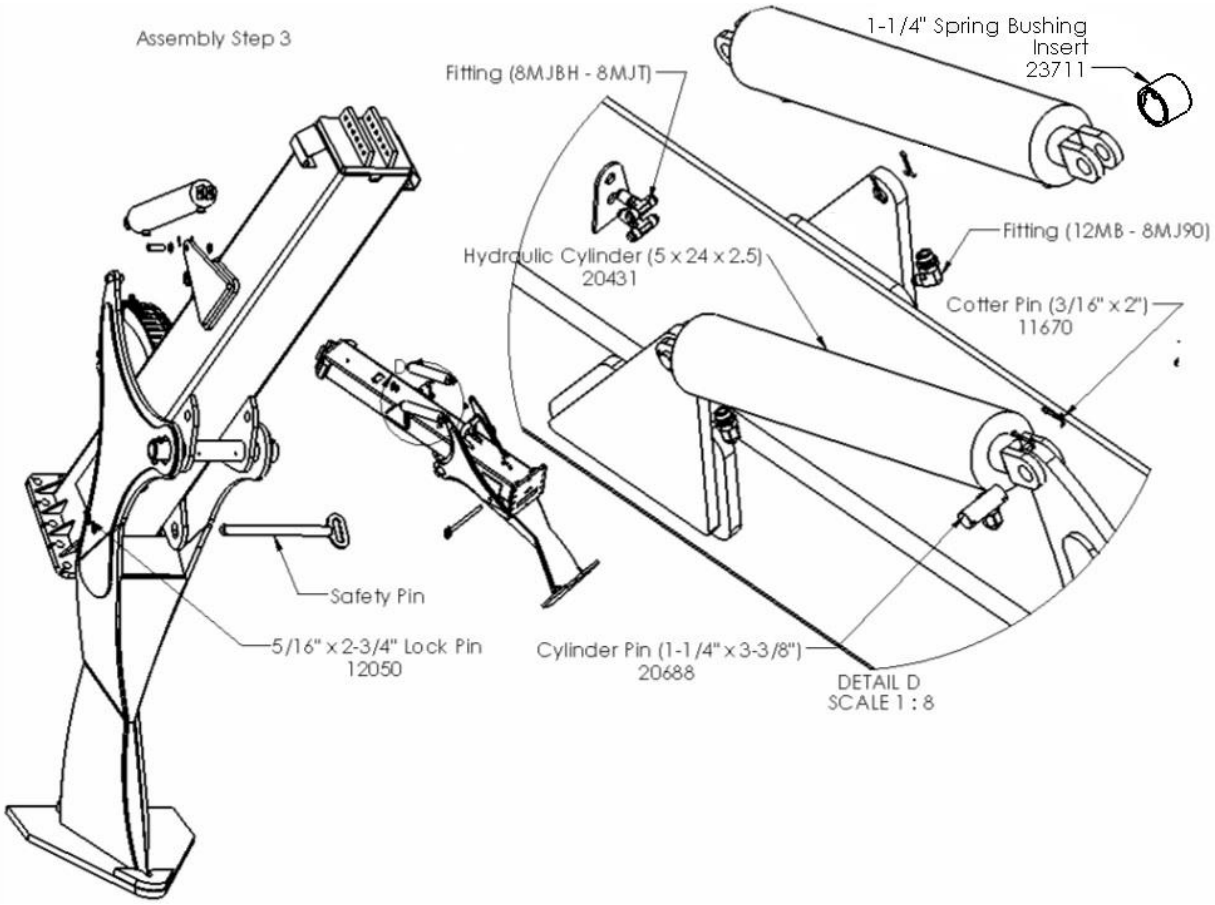

Figure 3.62 – Hydraulics assembly

f) Install 12MB - 8MJ90 fittings to each cylinder port, facing inwards and towards the front of the machine. Install two 8MJBH - 8MJT bulkhead tee fittings to the plate as shown, with the "tee" side towards the cylinders.

a) Run the hydraulic hoses. See Section 3.3 figure 16 for hydraulic schematic, in the hydraulic assembly section.

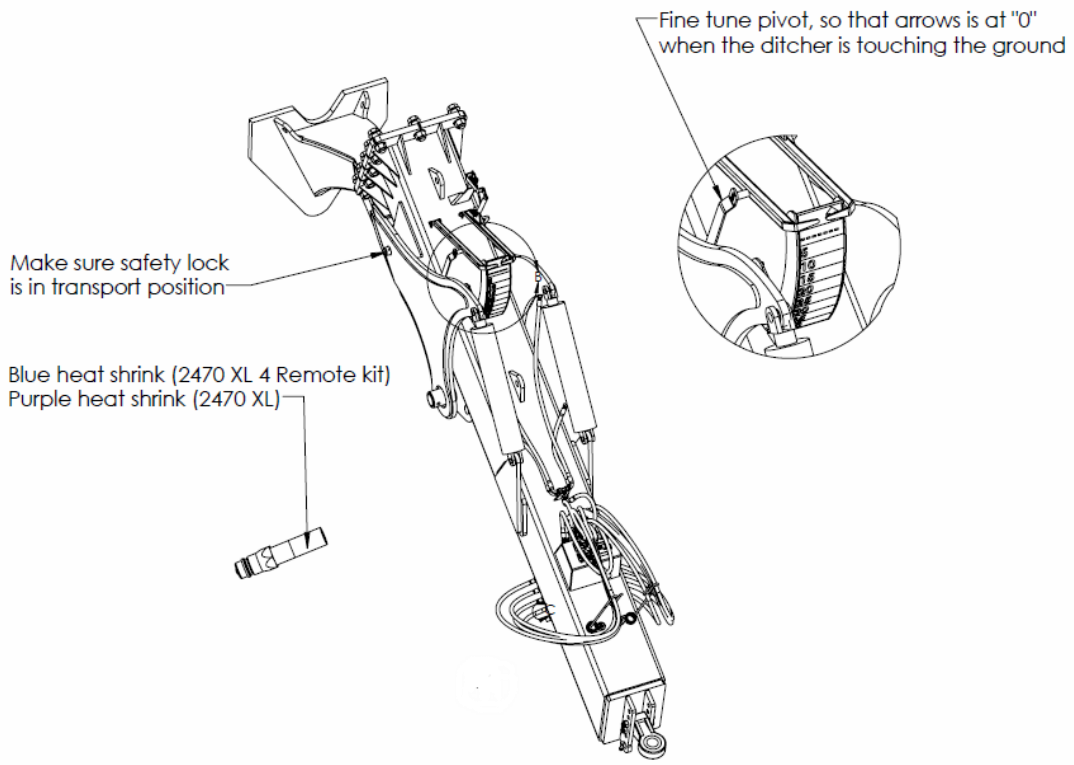

Figure 3.63 – Pulldozer Transformer 2470XL and 2470XL 4 Remote Kit

g) Connect a tractor and charge the hydraulics. With the blade and the trencher tip both touching the ground, set the depth indicator to read "0". Lift the trencher into transport position and insert the safety lock (22136) and the lock pin (12050).

3.7. Decals

DECAL LIST:

Pulldozer Transformer:

12228	Slow Moving Vehicle Sign	1
26649	Angle Indicator Decal	1
28383	Red Reflective Decal (2" x 9")	2
28384	Yellow Reflective Decal (2" x 9")	8
28385	Red-Orange Reflective Decal (2" x 9")	2
26647	RH Wing Position Indicator Decal	1
26646	LH Wing Position Indicator Decal	1
26648	Depth Indicator Decal	1
30063	Transformer Safety Lock Decal	1

"Red Option"

20940	WHEAT FIST LEFT	"FIST ///"	RED
20941	WHEAT FIST RIGHT	"FIST ///"	RED

Model-Specific:

"2470"

30068	REAR AXLE 2470	"//// PULLDOZER 2470 ////"	RED
30066	RIGHT HITCH, 2470	"FIST PULLDOZER 2470 \\\\"	RED
30067	LEFT HITCH, 2470	"//// PULLDOZER 2470 FIST"	RED

"2470XL"

30075	REAR AXLE 2470XL	"//// PULLDOZER 2470XL ////"	RED
30074	RIGHT HITCH, 2470XL	"FIST PULLDOZER 2470XL \\\\"	RED
30073	LEFT HITCH, 2470XL	"//// PULLDOZER 2470XL FIST"	RED

INSTALLATION:

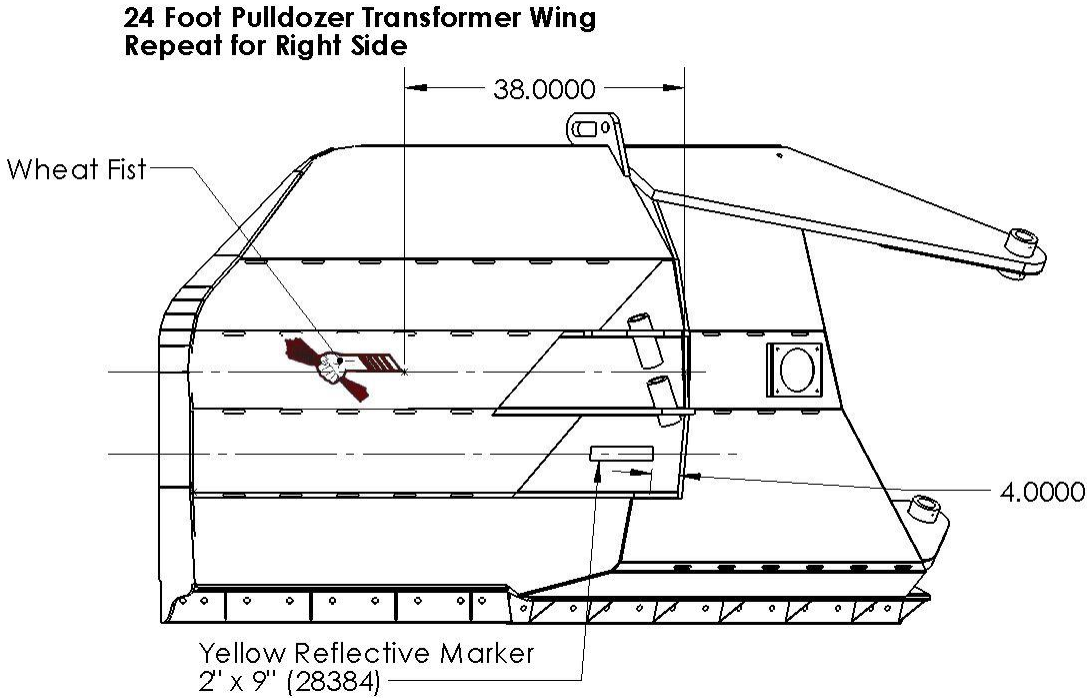

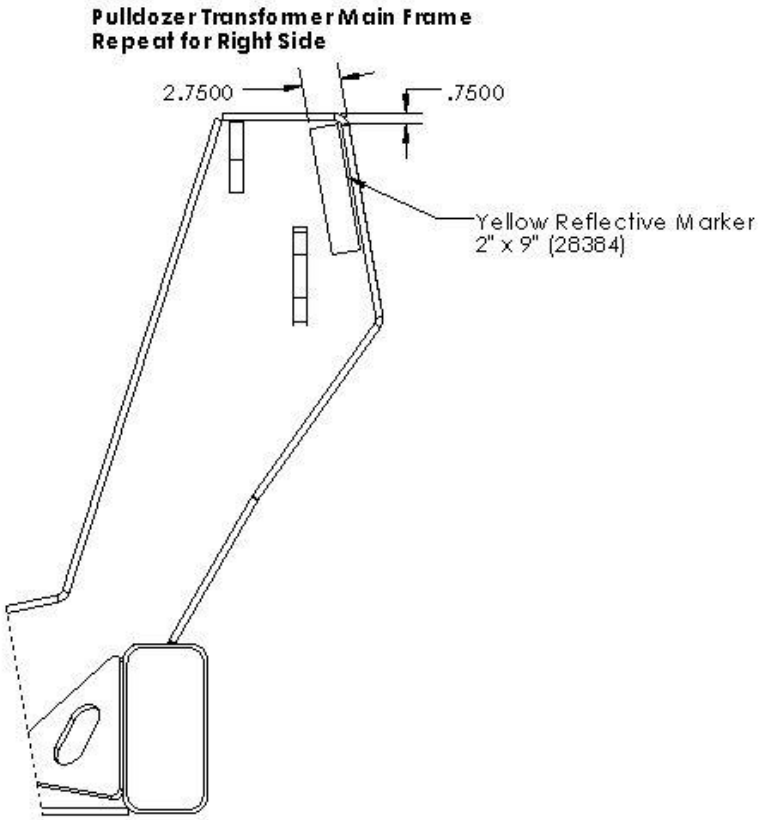

PULLDOZER TRANSFORMER
ANGLE INDICATOR

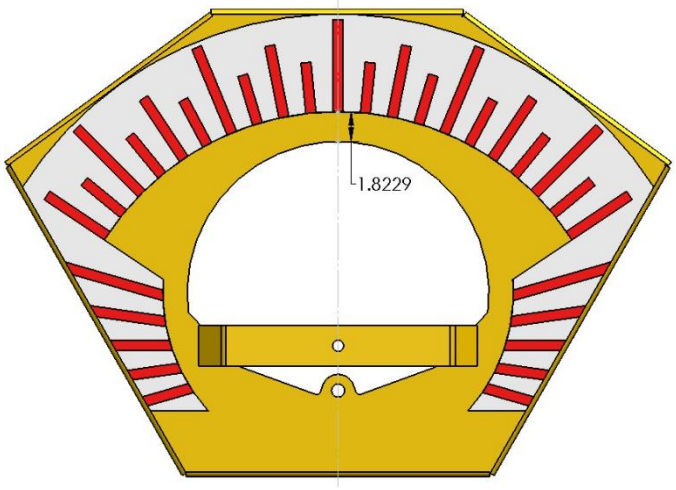

PULLDOZER TRANSFORMER
HEIGHT/TRENCHER DEPTH INDICATOR

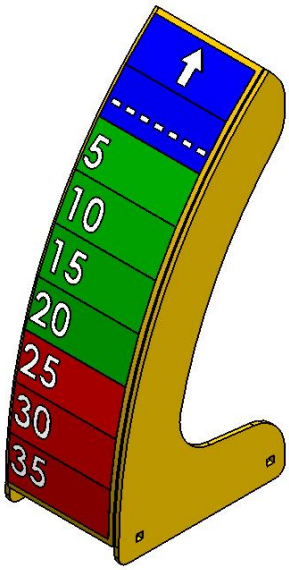

Pulldozer Transformer
Light Bar

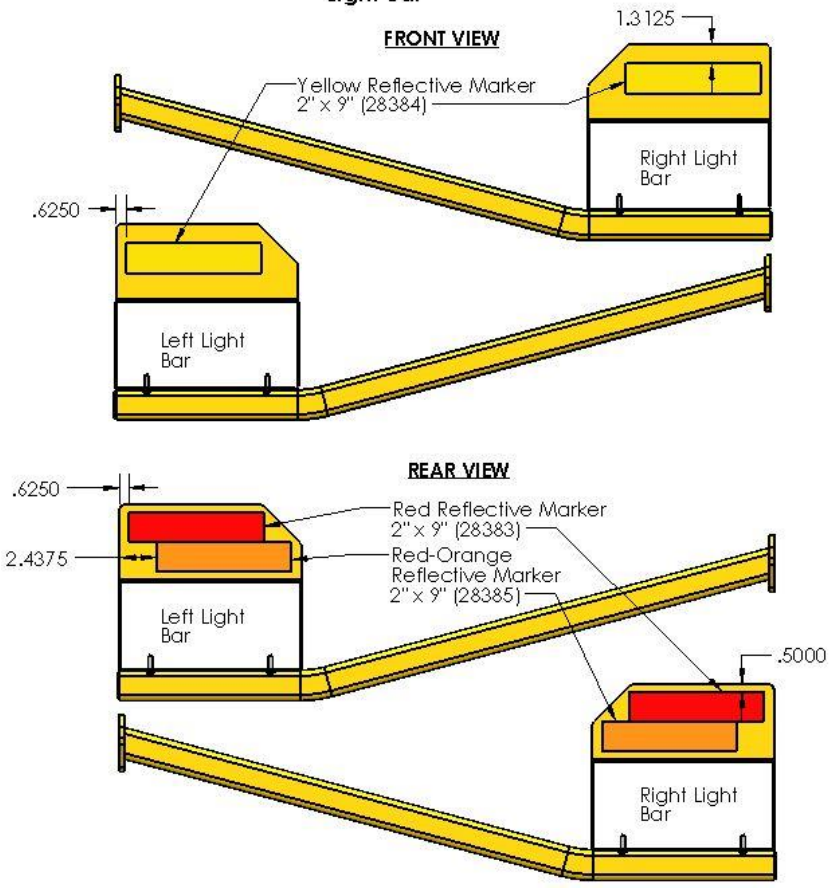

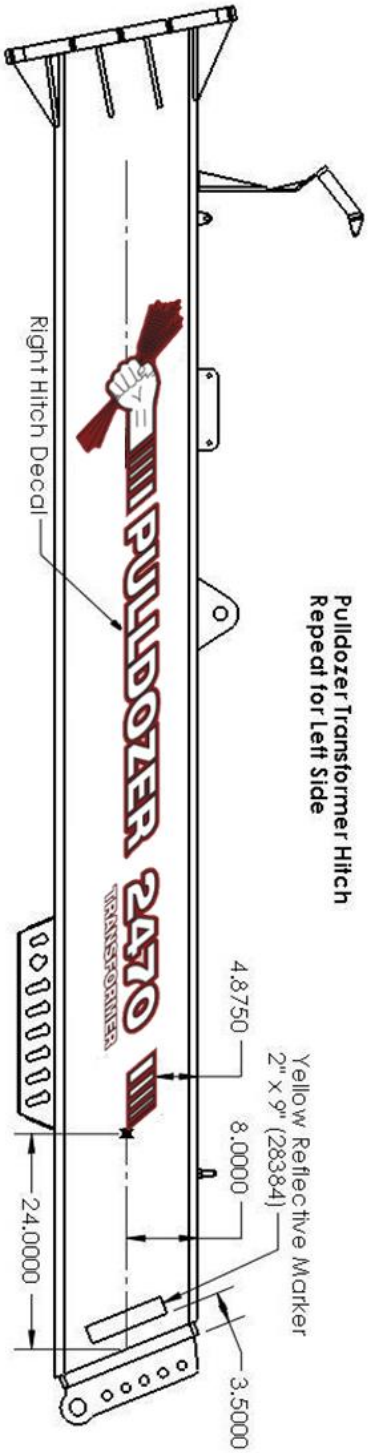
Pulldozer Transformer Hitch
Repeat for Left Side
Right Hitch Decal
4.8750
8.0000
24.0000
Yellow Reflective Marker
2" x 9" (28384)
3.5000
PULLDOZER 2470
TRANSFORMER

Pulldozer Transformer Back Axle
Rear Axle Decal
Split & Center Each Half
PULLDOZER 2470
TRANSFORMER

Pulldozer Transformer
SMV Sign

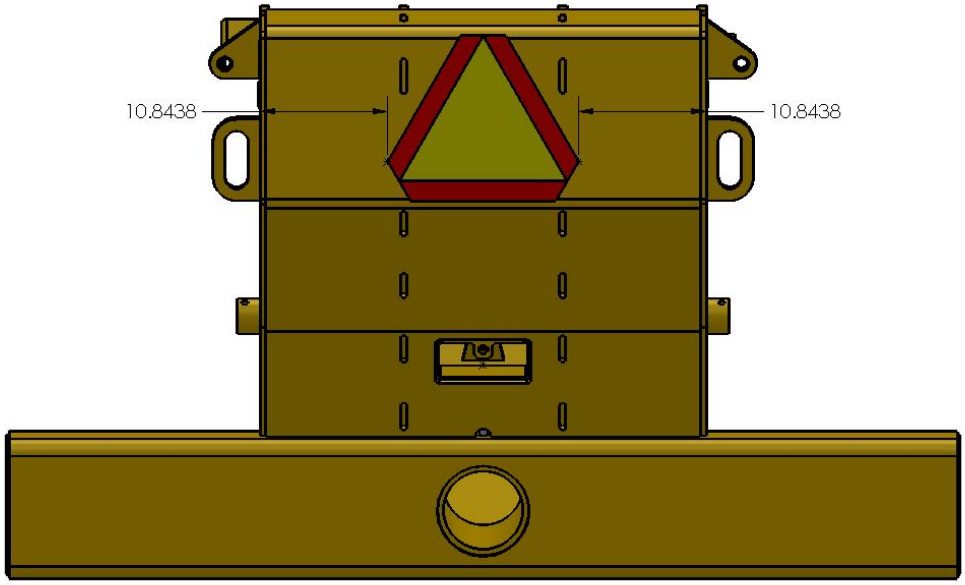

PULLDOZER TRANSFORMER
WING POSTION

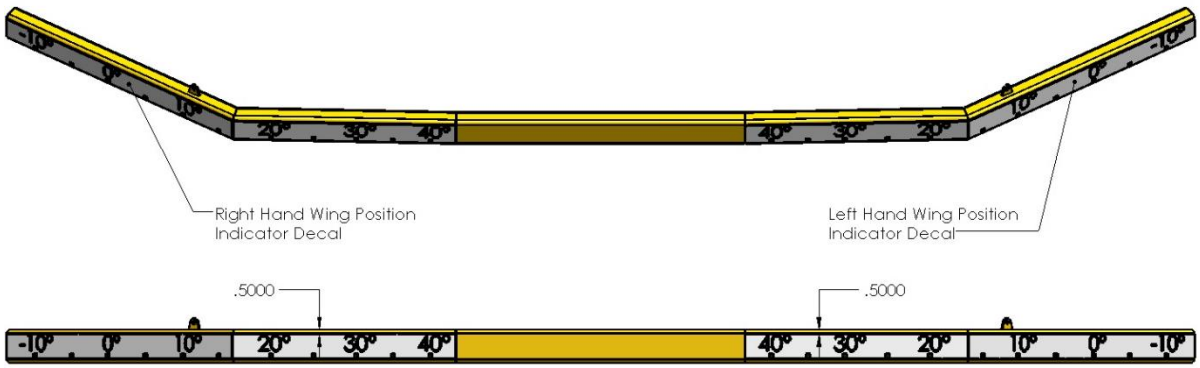

Pulldozer Transformer Lift Cylinder Safety Decal

- ASSEMBLY IS NOW COMPLETE -

4 Bolt Torque Values

FASTENER TORQUE CHARTS

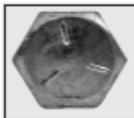

BOLT CLAMP LOADS

Suggested Assembly Torque Values

	USS/SAE GRADE 5					USS/SAE GRADE 8				
DIAMETER & THREADS PER INCH	TENSILE STRENGTH MIN. PSI	PROOF LOAD LB	CLAMP LOAD LB	TORQUE DRY FT LB	LUBRICATED FT LB	TENSILE STRENGTH MIN. PSI	PROOF LOAD LB	CLAMP LOAD LB	TORQUE DRY FT LB	LUBRICATED FT LB
1/4-20	120,000	2,700	2,020	8	6.3	150,000	3,800	2,850	12	9
28	120,000	3,100	2,320	10	7.2	150,000	4,350	3,250	14	10
5/16-18	120,000	4,450	3,340	17	13	150,000	6,300	4,700	24	18
24	120,000	4,900	3,700	19	14	150,000	6,950	5,200	27	20
3/8-16	120,000	6,600	4,950	30	23	150,000	9,300	6,980	45	35
24	120,000	7,450	5,600	35	25	150,000	10,500	7,900	50	35
7/16-14	120,000	9,050	6,780	50	35	150,000	12,800	9,550	70	50
20	120,000	10,100	7,570	55	40	150,000	14,200	10,650	80	60
1/2-13	120,000	12,100	9,050	75	55	150,000	17,000	12,750	110	80
20	120,000	13,600	10,200	85	65	150,000	19,200	14,400	120	90
9/16-12	120,000	15,500	11,600	110	80	150,000	21,800	16,350	150	110
18	120,000	17,300	12,950	120	90	150,000	24,400	18,250	170	130
5/8-11	120,000	19,200	14,400	150	110	150,000	27,100	20,350	210	160
18	120,000	21,800	16,350	170	130	150,000	30,700	23,000	240	180
3/4-10	120,000	28,400	21,300	260	200	150,000	40,100	30,100	380	280
16	120,000	31,700	23,780	300	220	150,000	44,800	33,500	420	310
7/8-9	120,000	39,300	29,450	430	320	150,000	55,400	41,600	600	450
14	120,000	43,300	32,450	470	350	150,000	61,100	45,800	670	500
1-8	120,000	51,500	38,600	640	480	150,000	72,700	54,500	910	680
14	120,000	57,700	43,300	720	540	150,000	81,500	61,100	1,020	760

When using anti-seize, reduce the lubed chart reading by 20% to properly torque. Always lubricate and use lubed torque values.

NOTES:

The above recommended assembly torques are offered as a guide only. Torque specifications, especially for critical joints, should be determined under actual assembly conditions due to the many variables involved which are difficult to predict and do affect the torque-tension relationship.

The above recommended clamp loads are based on 75% of the minimum specified proof loads for each grade and size.

Torques for Grades 5 and 8 were calculated based on the following relationship:

T = R D P

Where: T = Torque (ft lb)

D = Nominal Diameter (in)

P = Clamp Load (lb)

R = Tightening Coefficient

The value of R is assumed to be equal to .20 for dry, unplated conditions and equal to .15 for lubricated, including plated, conditions. Actual values of R can vary between .05 and .35 for commonly encountered conditions.

STRENGTH GRADE	APPLICABLE SIZES	PROOF LOAD STRESS (PSI)	YIELD STRENGTH MIN. STRESS (PSI)	TENSILE STRESS MIN. (PSI)
SAE Gr. 5	1/4 to 1" diameter over 1" diameter to 1-1/2 diameter	85,000 74,000	92,000 81,000	120,000 105,000
SAE Gr. 8	1/4 to 1" diameter	120,000	130,000	150,000

Pounds to Inch Pound Conversion

lb x 12 = inch lb

Example: 9 lb x 12 = 108 inch lb

FRACTIONAL MEASUREMENT		
BOLT DIAMETER	CAP SCREW WRENCH SIZE	NUT WRENCH SIZE
1/4	7/16	7/16
5/16	1/2	1/2
3/8	9/16	9/16
7/16	5/8	11/16
1/2	3/4	3/4
9/16	13/16	7/8
5/8	15/16	15/16
3/4	1-1/8	1-1/8
7/8	1-5/16	1-5/16
1"	1-1/2	1-1/2
1-1/8	1-11/16	1-11/16
1-1/4	1-7/8	1-7/8
1-3/8	2-1/16	2-1/16
1-1/2	2-1/4	2-1/4
1-3/4	2-5/8	2-5/8
2"	3"	3"
2-1/4	3-3/8	3-3/8
2-1/2	3-3/4	3-3/4
2-3/4	4-1/8	4-1/8
3"	4-1/2	4-1/2

Imperial has made a concerted effort to provide accurate information in its catalog and on its website, however Imperial assumes no responsibility for the accuracy of the information. All information published by Imperial in its catalogs, marketing literature, and on its website is provided "as is" without warranty, expressed or implied. Imperial and its vendors disclaim all warranties, expressed or implied including, without limitation, warranties of merchantability and fitness for a particular purpose.

FASTENER TORQUE CHARTS

GUIDE FOR PREVAILING-TORQUE LOCK NUT ASSEMBLY TORQUES (CAD AND WAX, GRADE B, C, AND GRADE G FLANGE NUTS) LOCK NUT STANDARDS FROM IFI-100 REQUIREMENTS

Torque-Tension Requirements

Size Threads Per Inch	Grade B Clamp Load (lb)	Grade B Assembly Torque Max.	Grade B Assembly Torque Min.	Grade C Clamp Load (lb)	Grade C Assembly Torque Max.	Grade C Assembly Torque Min.	Grade G Clamp Load (lb)	Grade G Assembly Torque Max.	Grade G Assembly Torque Min.
1/4–20	2,000	85**	60**	2,850	125**	85**	2,850	150**	100**
1/4–28	2,300	90**	65**	3,250	125**	85**	3,250	160**	105**
5/16–18	3,350	150**	110**	4,700	190**	130**	4,700	240**	155**
5/16–24	3,700	160**	120**	5,200	200**	140**	5,200	230**	155**
3/8–16	4,950	20	14.5	6,950	28	20	6,950	32	21
3/8–24	5,600	22	16	7,900	29	21	7,900	33	22
7/16–14	6,800	32	23	9,600	43	31	9,600	51	34
7/16–20	7,550	34	24	10,700	43	31	10,700	60	40
1/2–13	9,050	50	37	12,800	62.5	45	12,800	85	55
1/2–20	10,200	52.5	37.5	14,440	70	50	14,440	89	59
9/16–12	11,600	70	50	16,400	95	70	16,400	120	80
9/16–18	13,000	77.5	57.5	18,300	95	70	18,300	132	88
5/8–11	14,500	95	70	20,300	122.5	90	20,300	143	95
5/8–18	16,300	97.5	72.5	23,000	125	90	23,000	175	115
3/4–10	21,300	165	125	30,100	210	155	30,100	240	160
3/4–16	23,800	165	120	33,600	210	155	33,600	270	170
7/8–9	29,500	250	185	41,600	312.5	225	41,600	360	260
7/8–14	32,400	270	200	45,800	312.5	225	45,800	402	247
1–8	38,700	375	275	54,600	462.5	360	54,600	530	410
1–12	42,300	395	290	59,750	490	360	59,750	—	—
1–14	43,000	400	300	61,100	500	362.5	61,100	645	398
1-1/8–7	42,100	404	294	69,000	585	454	69,000	—	—
1-1/8–12	47,500	437	327	76,800	622	453	76,800	—	—
1-1/4–7	53,500	513	375	87,000	736	573	87,000	—	—
1-1/4–12	59,700	549	412	96,600	782	570	96,600	—	—
1-3/8–6	63,800	612	445	104,000	880	685	104,000	—	—
1-3/8–12	72,900	670	503	118,000	955	696	118,000	—	—
1-1/2–6	77,600	745	545	127,000	1,075	837	127,000	—	—
1-1/2–12	87,700	807	605	142,000	1,150	837	142,000	—	—

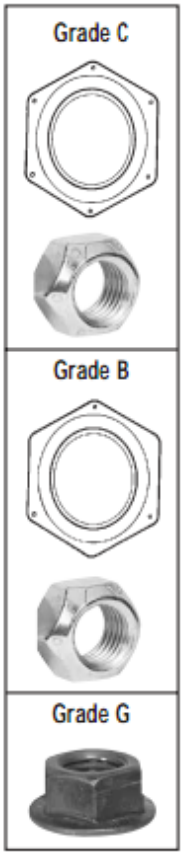

- Clamp loads for the Grade B lock nuts equal 75% of the bolt proof loads specified for SAE J-429 Grade 5, and ASTM A-449 bolts.
  Clamp loads for Grade C lock nuts equal 75% of the bolt proof loads specified for SAE J-429 Grade 8, and ASTM A-354 Grade BD bolts.
- IFI-100 does not govern lock nuts above 1". The values shown in the chart are to be used as a mid-range guideline.

** Torque values for 1/4" and 5/16" sizes are in inch lb. All other torque values are in foot lb.

METRIC TORQUE CHART FOR HEX HEAD CAP SCREWS

Size	Class	Newton Meters Zinc Plated	Newton Meters Unplated	Foot Pounds (approx.) Zinc Plated	Foot Pounds (approx.) Unplated	Class
M4 x .70 Pitch	8.8	3.1	2.2	2.30	1.65	
M5 x .80 Pitch	8.8	6.1	5.5	4.58	4.13	
M6 x 1.00 Pitch	8.8	10.4	9.5	7.80	7.13	
M7 x 1.00 Pitch	8.8	17.0	15.5	12.75	11.63	
M8 x 1.25 Pitch	8.8	25.0	23.0	18.75	17.25	
M8 x 1.00 Pitch	8.8	27.0	24.5	20.25	18.38	
M10 x 1.50 Pitch	8.8	51.0	46.0	38.25	34.50	
M10 x 1.00 Pitch	8.8	57.0	52.0	42.75	39.00	
M10 x 1.25 Pitch	8.8	54.0	49.0	40.50	36.75	
M12 x 1.75 Pitch	8.8	87.0	79.0	65.25	59.25	
M12 x 1.25 Pitch	8.8	96.0	87.0	72.00	65.25	
M12 x 1.50 Pitch	8.8	92.0	83.0	69.00	62.25	
M14 x 2.00 Pitch	8.8	140.0	125.0	105.00	93.75	
M14 x 1.50 Pitch	8.8	150.0	135.0	112.50	101.25	
M16 x 2.00 Pitch	8.8	215.0	195.0	161.25	146.25	
M18 x 2.50 Pitch	8.8	300.0	280.0	225.00	210.00	
M20 x 2.50 Pitch	8.8	430.0	390.0	322.50	292.50	
M22 x 2.50 Pitch	8.8	580.0	530.0	435.00	397.50	
M24 x 3.00 Pitch	8.8	740.0	670.0	555.00	502.50	
M6 x 1.00 Pitch	10.9	15.5	14.0	11.63	10.50	
M8 x 1.25 Pitch	10.9	37.0	34.0	27.75	25.50	
M10 x 1.50 Pitch	10.9	75.0	68.0	56.25	51.00	
M12 x 1.75 Pitch	10.9	160.0	117.0	97.50	87.75	
M14 x 2.00 Pitch	10.9	205.0	185.0	153.75	138.75	
M16 x 2.00 Pitch	10.9	310.0	280.0	232.50	210.00	

TORQUE CHART FOR STAINLESS STEEL CAP SCREWS

Size	316 inch-lb	18/8 inch-lb
6-32	10.1	9.6
6-40	12.7	12.1
8-32	20.7	19.8
8-36	23.0	22.0
10-24	23.8	22.8
10-32	33.1	31.7
1/4-20	78.8	75.2
1/4-28	99.0	94.0
5/16-18	138.0	132.0
5/16-24	147.0	142.0
3/8-16	247.0	236.0
3/8-24	271.0	259.0
7/16-14	393.0	376.0
7/16-20	418.0	400.0
1/2-13	542.0	517.0
1/2-20	565.0	541.0
9/16-12	713.0	682.0
9/16-18	787.0	752.0
5/8-11	1,160.0	1,110.0
5/8-18	1,301.0	1,244.0
3/4-10	1,582.0	1,530.0
3/4-16	1,558.0	1,490.0
7/8-9	2,430.0	2,328.0
7/8-14	2,420.0	2,318.0
1"-8	3,595.0	3,440.0
1"-14	3,250.0	3,110.0

PHONE: 1-800-558-2808 FAX: 1-800-553-8769 WEB: www.imperialsupplies.com

NOTES